ENERGYPLUS™

Input Output Reference

The Encyclopedic Reference to EnergyPlus Input and Output

Date: April 6, 2001

COPYRIGHT © 1996-2001 THE BOARD OF TRUSTEES OF THE UNIVERSITY OF ILLINOIS AND THE REGENTS OF THE UNIVERSITY OF CALIFORNIA THROUGH THE ERNEST ORLANDO LAWRENCE BERKELEY NATIONAL LABORATORY PENDING APPROVAL OF THE US DEPARTMENT OF ENERGY.

ALL RIGHTS RESERVED. NO PART OF THIS MATERIAL MAY BE REPRODUCED OR TRANSMITTED IN ANY FORM OR BY ANY MEANS WITHOUT THE PRIOR WRITTEN PERMISSION OF THE UNIVERSITY OF ILLINOIS OR THE ERNEST ORLANDO LAWRENCE BERKELEY NATIONAL LABORATORY.

ENERGYPLUS IS A TRADEMARK OF THE US DEPARTMENT OF ENERGY.

TABLE OF CONTENTS

Input-Output Reference 1

What's different about EnergyPlus Input and Output? 1

IDD Conventions 1

Group -- Location – Climate – Weather File Access 4

Location 4

RunPeriod 5

DesignDay 7

Figure 1. Daily range Multiplier for Design Days 8

SpecialDayPeriod 11

Table 1. Date Field Interpretation 11

DaylightSavingPeriod 12

GroundTemperatures 13

Climate Group Outputs 14

Group -- Simulation Parameters 15

TimeStep In Hour 15

Building 15

Figure 2. Illustration of Building North Axis 17

Airflow Model 18

Inside Convection Algorithm 19

Outside Convection Algorithm 19

Solution Algorithm Selection 20

Sky Radiance Distribution 20

Shadowing Calculations 20

Zone Volume Capacitance Multiplier 21

Run Control 21

Simulation Parameter Outputs 22

TABLE OF CONTENTS

Group -- Schedules 22

ScheduleType 23

DaySchedule 23

WeekSchedule 24

Schedule 25

Schedule Outputs 26

Group – Surface Construction Elements 27

Specifying the Building Envelope 27

Materials 27

Material:Regular 27

Material:Regular-R 29

Material:Air 31

MaterialProperty:Moisture:MTF 32

MaterialProperty:Moisture:EMPD 34

Materials for Glass Windows and Doors 35

Material:WindowGlass 36

Conversion from Alternative Specification of Glass Optical Properties 38

Material:WindowGas 40

Material:WindowShade 41

WindowGlassSpectralData 43

Construction 46

Figure 3. Floor 38 illustration 47

Figure 4. Illustration for material ordering in Windows 48

Construction With Internal Source 49

Construction Element Outputs 52

Group – Thermal Zone Description/Geometry 52

TABLE OF CONTENTS

Zone 52

Figure 5. Illustration of Zone North Axis and Origins 53

Surface(s) 54

SurfaceGeometry 54

Figure 6. EnergyPlus Coordinate System 55

Surface Vertices 56

Figure 7. Illustration for Surface Vertices 57

Surface:HeatTransfer 57

Surface:HeatTransfer:Sub 60

Window Heat Transfer Output Variables 64

Incident Solar Output Variables 64

Surface:HeatTransfer:InternalMass 65

Figure 8. Representing 11 internal walls as internal mass 65

Surface:Shading:Detached 66

Surface:Shading:Attached 67

Figure 9. Illustration for Attached Shading Surface 69

WindowShadingControl 70

WindowFrameAndDivider 75

Figure 10. A window with a frame and divider. 75

Figure 11. Illustration showing frame and divider dimensioning 76

Figure 12. Illustration showing divider types. 78

Other Side Coefficients 82

Figure 13. Illustration for Other Side Coefficients 84

Movable Insulation 85

Zone Description/Geometry Output 86

Group – Space Gains 86

TABLE OF CONTENTS

People....86
People Output....90
Lights....91
Lights Output....93
Electric Equipment....93
Gas Equipment....95
Other Equipment, Hot Water Equipment, Steam Equipment....96
Equipment Output....96
Daylighting....97
Table 2. Stepped Lighting Control Example....98
Table 3. Recommended Values -- Discomfort Glare Index....99
Figure 14. Illustration of continuous dimming relationship....100
Figure 15. Stepped lighting control with Number of Steps = 3.....100
Daylighting Output....102
Baseboard Heat....103
Baseboard Heat Output....104
Group – ExteriorEnergyUse Equipment....104
ExteriorLights....104
ExteriorLights Output....105
ExteriorFuelEquipment....105
ExteriorWaterEquipment....106
ExteriorFuelEquipment, ExteriorWaterEquipment Outputs....107
Group – AirFlow....107
Infiltration....107
Infiltration Output....109
Mixing....109

TABLE OF CONTENTS

Mixing Output 110

Cross Mixing 110

Cross Mixing Output 111

Overview of the COMIS/EnergyPlus Link 111

Table 4. Thermal vs. AirFlow representations of a building 112

COMIS Simulation 112

COMIS Air Flow: Crack 115

COMIS Air Flow: Opening 117

COMIS Surface Data 120

COMIS Zone Data 122

COMIS Site Wind Conditions 122

COMIS External Node 123

COMIS Standard Conditions for Crack Data 124

COMIS CP ARRAY 124

COMIS CP VALUES 125

Group – Design Objects 126

Zone Sizing 126

Zone Sizing Outputs 128

System Sizing 128

System Sizing Outputs 130

HVAC: Primary and Secondary Systems 130

Figure 16. Example Node Diagram 131

Group – Node-Branch Management 132

Node List 132

Node List Output 133

Branch List 133

TABLE OF CONTENTS

Branch List Output 134

Branch 134

Branch Output 136

Connector List 136

Connector List Output 137

Pipe 138

Pipe Output 138

Group – Plant-Condenser Loops 138

Plant Loop 138

Figure 17. Plant Loop Input Syntax Map 139

Plant Loop Outputs 141

Condenser Loop 142

Figure 18. Condenser Loop Input Syntax Map 142

Condenser Loop Outputs 145

Heat Recovery Loop 145

Figure 19. Heat Recovery Loop Schematic 145

Group – Plant-Condenser Control 147

Operation Schemes (Plant and Condenser) 147

Plant Operation Schemes 147

Condenser Operation Schemes 148

Load Range Based Operation 149

Load Range Equipment List 150

Group – Plant-Condenser Equipment 151

Equipment Types (Plant and Condenser) 151

Chiller: Absorption 151

Absorption Chiller Outputs 154

TABLE OF CONTENTS

Chiller:CONST COP 154

Constant COP Chiller Outputs 155

Chiller:Electric 155

Electric Chiller Outputs 159

Chiller:EngineDriven 160

Engine Driven Chiller Outputs 166

Chiller:Gas Turbine 166

Gas Turbine Chilller Outputs 173

Chiller:Gas Absorption 174

Gas Absorption Chiller Outputs 180

Boiler: Simple 181

Boiler Outputs 183

WaterHeater: Simple 183

Water Heater Outputs 185

Purchased: Chilled Water 186

Purchased Chilled Water Outputs 186

Purchased: Hot Water 186

Purchased Hot Water Outputs 187

Pump:Variable Speed 187

Pump Outputs 189

Cooling Tower:Single Speed 189

Cooling Tower:Single Speed Outputs 191

Cooling Tower:Two Speed 191

Cooling Tower:Two Speed Outputs 193

Group – Plant-Condenser Flow Control 194

Splitter,Mixer 194

TABLE OF CONTENTS

Splitter 194

Mixer 195

Group – Air Distribution 195

Air Primary Loop 195

Figure 20. Air Loop Input Syntax Map 198

Controller List 198

System Availability Manager List 199

System Availability Manager:Scheduled 200

Outside Air System 201

Air Loop Equipment List 202

Outside Air Inlet Node List 203

Outside Air Mixer 204

Group – Zone Equipment 205

Figure 22. Zone Equipment 207

Figure 23. Air Loop/Zone Equipment Node Diagram 208

Air Distribution Unit 208

Zone Control:Thermostatic 209

Controlled Zone Equip Configuration 210

Zone Equipment List 211

Group -- Air Path 213

Zone Supply Air Path, Zone Return Air Path 213

Zone Supply Air Path 213

Zone Return Air Path 214

Zone Return Plenum 214

Figure 24. Illustration of Zone Return Plenum 215

Zone Supply Plenum 216

TABLE OF CONTENTS

Figure 25. Illustration of Zone Supply Plenum....216

Zone Mixer, Zone Splitter 218

Zone Splitter 218

Zone Mixer....218

Group – Zone Thermostats 219

Single Heating Setpoint....219

Single Cooling Setpoint 219

Single Heating Cooling Setpoint....220

Dual Setpoint with Deadband....220

Group -- Coils....221

Figure 26. Example Air Loop Heating & Cooling Coil 221

Coil:Water:SimpleCooling....221

Simple Cooling Water Coil Outputs....222

Coil:Water:SimpleHeating 222

Simple Heating Water Coil Outputs....223

Coil:Electric:Heating 223

Electric Heating Coil Outputs....224

Coil:Gas:Heating....224

Gas Heating Coil Outputs....225

Coil:Water:DetailedFlatCooling 225

Figure 27. Geometry of a Cooling Coil (CC) 226

Figure 28.Number of Coolant Circuits (CCNCC) 227

Detailed Water Coil Outputs....230

Coil:DX:BF-Empirical....230

DX Coil Outputs....234

Group – Fans....235

TABLE OF CONTENTS

Table 5. Fan Coefficient Values 236

Fan:Simple:Const Volume 236

Simple Constant Volume Fan Outputs 237

Fan:Simple:Variable Volume 237

Simple Variable Volume Fan Outputs 239

Zone Exhaust Fan 239

Zone Exhaust Fan Outputs 241

Group -- Humidifiers 241

Humidifier:Steam:Electrical 241

Humidfier:Steam:Electrical Outputs 242

Group – Desiccant Dehumidifiers 243

Desiccant Dehumidifier:Solid 243

Solid Desiccant Dehumidifier 249

Group – Air Distribution Units 249

Dual Duct:Const Volume 250

Dual Duct:VAV 250

Single Duct:Const Volume:Reheat 251

Single Duct:VAV:Reheat 253

Single Duct:Series PIU:Reheat 256

Single Duct:Series PIU:Reheat Outputs 259

Single Duct:Parallel PIU:Reheat 259

Single Duct:Parallel PIU:Reheat Outputs 263

Group – Local Convective Units 263

Purchased Air 263

Purchased Air Outputs 264

Direct Air 265

TABLE OF CONTENTS

Fan Coil Unit: 4 Pipe 266

Fan Coil Outputs 270

Unit Ventilator 271

Unit Ventilator Outputs 277

Unit Heater 278

Unit Heater Outputs 282

Furnace:BlowThru:HeatOnly 283

Figure 29. Schematic of EnergyPlus Furnace Model 283

Furnace:BlowThru:HeatOnly Outputs 286

Furnace:BlowThru:HeatCool 286

Figure 30. Schematic of EnergyPlus Heat/Cool Furnace 287

Furnace:BlowThru:HeatCool Outputs 291

UnitarySystem:BlowThru:HeatOnly 291

Figure 31. Schematic of EnergyPlus Heat-Only Unitary System 291

UnitarySystem:BlowThru:HeatOnly Outputs 294

UnitarySystem:BlowThru:HeatCool 294

UnitarySystem:BlowThru:HeatCool 295

Figure 32. Schematic of EnergyPlus Heat/Cool Unitary System 295

UnitarySystem:BlowThru:HeatCool Outputs 299

Air Conditioner:Window:Cycling 299

Air Conditioner:Window:Cycling Outputs 302

DXSystem:AirLoop 303

Figure 33. Schematic of EnergyPlus DX System in Air Loop 304

DXSystem:AirLoop Outputs 305

Group – Radiative Convective Units 306

Baseboard Heater:Water:Convective 306

TABLE OF CONTENTS

Baseboard Heater Outputs....307

Low Temp Radiant System:Hydronic....307

Hydronic Low Temperature Radiant System Outputs....311

Low Temp Radiant System:Electric....312

Electric Low Temperature Radiant System Outputs....314

High Temp Radiant System....315

High Temperature Radiant System Outputs....320

Group – Set Point Managers....321

Set Point Manager:Scheduled....321

Set Point Manager:Outside Air....322

Set Point Manager:SingleZone Reheat....324

Set Point Manager:Single Zone Min Hum....326

Group – Controllers....327

Controls (Air Loop and Zone Equipment)....327

Controller:Simple....327

Controller:Outside Air....329

Controller:Zone Loop (Not Applicable)....332

Group – Evaporative Coolers....332

EvapCooler:Direct:CelDekPad....333

Figure 34. Direct Stage Evaporative Cooler....333

Figure 35. Psychrometric Chart -- Constant Enthalpy....333

EvapCooler:Direct:CelDekPad Outputs....335

EvapCooler:InDirect:CelDekPad....335

Figure 36. Evaporative Cooler -- Indirect Dry Coil....335

Figure 37. Secondary Air Process -- Indirect Dry Coil Evap Cooler....336

EvapCooler:InDirect:CelDekPad Outputs....338

TABLE OF CONTENTS

EvapCooler:InDirect:WetCoil 338

Figure 38. Evaporative Cooler -- Wet Coil 338

Figure 39. Secondary Air Process – Indirect Wet Coil Evap Cooler 339

EvapCooler:InDirect:WetCoil Outputs 340

Group – Heat Recovery 341

Heat Exchanger:Air to Air:Flat Plate 341

Heat Exchanger:Air to Air:Flat Plate Outputs 343

Group -- Electric Load Center-Generator Specifications 343

Electric Load Center:Distribution 343

Electric Load Center:Generators 344

Generator: Diesel 345

Generator:Diesel Outputs 349

Generator:Gas Turbine 349

Generator:Gas Turbine Outputs 354

Group – Performance Curves 354

Curve:Quadratic 354

Curve:Cubic 355

Curve:Biquadratic 356

Group – Fluid Properties 358

FluidNames 358

FluidPropertyTemperatures 359

Refrigerant Fluid Type 360

FluidPropertySaturated 360

FluidPropertySuperheated 361

Glycol Fluid Type 363

FluidPropertyConcentration 363

TABLE OF CONTENTS

Input for Output 365

Group – Report 365

Report 365

Type_of_Report = Surfaces 365

Figure 40. Example building from DXF report. 366

Type_of_Report = Variable Dictionary 366

Type_of_Report = Constructions 369

Report Variable 369

Report Meter 370

Table 6. Table of Metered Fuel Types 371

Table 7. End Use Category Types 371

Table 8. Overall Meter Types 371

Output 373

Figure 41. Example Chart from Standard Output File 374

Weather Data 375

Table 9. Weather File Date Field Interpretation 375

Table 10. Missing weather replacement values 378

Running EnergyPlus 381

Table 11. EnergyPlus Output Files 381

Table 12. EnergyPlus Errors 382

Table 13. Timings Comparison (EnergyPlus vs. BLAST) 382

Appendix A. Units and Abbreviations 383

Standard EnergyPlus Units 383

Table 14. Standard EnergyPlus Units 383

Appendix B. Simple IDF file 385

Appendix C. Input Macros 388

TABLE OF CONTENTS

Introduction 388

Incorporating External Files 388

Selectively Accepting or Skipping Lines of Input 389

Defining Blocks of Input 391

Arithmetic Operations 392

Macro Debugging and Listing Control 394

Listing Format 396

Appendix D. Acknowledgments 397

Copyright Notice 397

Other Acknowledgments 398

Input-Output Reference

This document is intended to be an encyclopedic reference for the EnergyPlus Input Data Dictionary (IDD), Input Data File (IDF) and potential resultant outputs (various output files).

The following descriptions are "grouped" by the elements in the IDD (ref: Getting Started Document and the IDD Conventions). In some cases, the descriptions of reporting will be done for an object (e.g. Lighting electrical consumption or thermal comfort value for a group of people) and in some cases for the entire group (e.g., ambient condition reports).

What's different about EnergyPlus Input and Output?

The usual procedure for non-interactive programs is to process all the input necessary to "do the job", perform the actions required by the input, and somewhere along the way produce reports on the actions. Usually, there will be error messages on incorrect input statements and/or incorrect conditions detected during processing. Usually, the input is echoed in its entirety so that the context of errors is shown clearly.

EnergyPlus does all the above. However, some nuances are different from the usual actions.

1) EnergyPlus reads the data dictionary (Energy+.idd) and the input data file (in.idf) prior to doing anything else. Only after this is done does processing start. HOWEVER, the input processor only knows as much as the data dictionary has told it. It knows which fields should be alpha and which should be numeric. All of this information (including the IDD) is echoed to the audit file (audit.out) in case errors occur. Most of the errors show up (out of context) in the standard error file (eplusout.err) – there might be enough information to decipher where the error is or you may have to look at the more inclusive audit file. Invalid numeric fields are detected during this processing and default numeric fields are filled. For more information on the IDD, its structure and implications, please see the IDD Conventions discussion below.

2) The biggest difference between EnergyPlus and more traditional input processing is that EnergyPlus is modular in its actual filling in the details for the simulation. Because of the modular structure of EnergyPlus, each module is responsible for "getting" its own input. It receives this input from the input processor in the form of alpha and numeric fields. Each module typically gets all its input the first time it is called. The implication for the user is that error messages may show up in somewhat peculiar places. A further implication is that no order is needed in the input data file! Data that is not needed by a particular simulation is not processed.

3) The data dictionary has the capability to do "automatic" range checking on numeric fields as well as fill in numeric defaults. Both filling in defaults and "automatic" range checking are done when the data is read. Other checks may need a combination of fields and won't be done until the data is "processed" (after the simulation starts).

4) A couple of other differences that might not be true in other programs: Blanks are significant in alpha fields SO DesignDay is not the same as Design Day (1 space between Design and Day) nor Design Day (2 spaces between Design and Day). Alpha objects, however, *are* case insensitive SO DesignDay is the same as 'designday' or 'DESIGNDAY'.

IDD Conventions

The following is a basic description of the structure of the IDD (it's actually taken directly from the IDD file). As noted within, ! signifies a comment character as does the \. \ has also been adopted as a convention for including more specific comments about each field in an object. These have been used with success in the IDFEditor and it is hoped the flexibility will provide other interface developers with useful information.

```
! ****************************************************************************
```

```
! Object Description
! -------------------
! To define an object (a record with data), develop a key word that is unique
! Each data item to the object can be A (Alphanumeric string) or N (numeric)
! Number each A and N.  This will show how the data items will be put into the
! arrays that are passed to the Input Processor "Get" (GetObjectItem) routines.
! All alpha fields are limited to 40 characters. Numeric fields should be valid
! numerics (can include such as 1.0E+05) and are placed into single precision
! variables.
!
! Object Documentation
! --------------------
! In addition, the following special comments appear one per line and
! are followed by a value.  Comments may apply to a field, and object
! or a group of objects.
!
! Field-level comments:
!
!  \field           Name of field
!                     (should be succinct and readable, blanks are encouraged)
!
!  \note            Note describing the field and its valid values
!
!  \required-field  To flag fields that may not be left blank
!                     (this comment has no "value")
!
!  \units           Units (must be from EnergyPlus standard units list)
!                   EnergyPlus units are standard SI units
!
!  \ip-units        IP-Units (for use by input processors with IP units)
!
!  \minimum         Minimum that includes the following value
!
!  \minimum>        Minimum that must be > than the following value
!
!  \maximum         Maximum that includes the following value
!
!  \maximum<        Maximum that must be < than the following value
!
!  \default         Default for the field (if N/A then omit entire line)
!
!  \type            Type of data for the field -
!                     integer
!                     real
!                     alpha     (arbitrary string),
!                     choice    (alpha with specific list of choices, see \key)
!                     object-list (link to a list of objects defined elsewhere,
!                                  see \object-list and \reference)
!
!  \key            Possible value for "\type choice" (blanks are significant)
!                  use multiple \key lines to indicate all valid choices
!
!  \object-list    Name of a list of object names that are valid entries
!                  for this field (used with "\reference")
!                  see ZONE and Surface:HeatTransfer objects below for examples
!
!  \reference      Name of a list of object names to which this object belongs
!                  used with "\type object-list" and with "\object-list" see
!                  ZONE and Surface:HeatTransfer objects below for examples:
!
!                        ZONE,
!                          A1 , \field Zone Name
!                               \type alpha
```

```
!                                \reference ZoneNames
!                         Surface:HeatTransfer,
!                           A4 , \field InsideFaceEnvironment
!                                \note Zone the surface is a part of
!                                \type object-list
!                                \object-list ZoneNames
!
!      For each zone, the field "Zone Name" may be referenced
!      by other objects, such as Surface:HeatTransfer, so it is commented
!      with "\reference ZoneNames"
!      Fields, which reference a zone name, such as a Surface:HeatTransfer's
!      "InsideFaceEnvironment", are commented as
!      "\type object-list" and "\object-list ZoneNames"
!
! Object-level comments:
!
!  \memo            Memo describing the object
!
!  \unique-object   To flag objects that should appear only once in an idf
!                     (this comment has no "value")
!
!  \required-object To flag objects that are required in every idf
!                     (this comment has no "value")
!
! Group-level comments:
!
!  \group          Name for a group of related objects
!
!
! Notes on comments
! -----------------
!! 1.  If a particular comment is not applicable (such as units, or default)
! then simply omit the comment rather than indicating N/A.
!! 2.  Memos and notes should be brief (recommend 5 lines or less per block).
! More extensive explanations are expected to be in the user documentation
!! ************************************************************************
```

In the descriptions below, you will see IDD snippets for each input object. The LOCATION object will serve as an example.

```
Location,
  A1 , \field LocationName
       \type  alpha
  N1 , \field Latitude
       \units deg
       \type real
  N2 , \field Longitude
       \units deg
       \type real
  N3 , \field TimeZone
       \units hr (decimal)
       \type real
  N4 ; \field Elevation
       \units m
       \type real
```

For the purposes of this example, the IDD snippet above is somewhat abbreviated from the true definition that you will find in the IDD file and below in the more complete description of the Location object.

First, the object name is given. (Location) This is followed by a comma in both the definition (IDD) and in an input file (IDF). In fact, all fields except the terminating field of an IDD class object and IDF object are followed by commas. The final field in an IDD class object or in an IDF object is terminated by a semi-colon.

Next is an alpha field, the location name. As noted above, for input, spaces are significant in this field. The main inputs for Location are numeric fields. These are numbered (as is the alpha field) for convenience. The \ designations will show various information about the objects as described above in the IDD conventions discussion. Of importance for reading this document are the units and possible minimum and maximum values for a field.

There is automatic processing of the \minimum, \maximum and \default data for numeric fields. Any infractions of the \minimum, \maximum fields are automatically detected and messages will appear in the standard error file. After all the input is checked, infractions will cause program termination (before the bulk of the simulation is completed). Defaults are also enforced if you leave the numeric field blank.

Some objects need all the parameters listed by the definition; some do not. In the descriptions that follow, we will try to indicate which parts are optional. Usually, these will be the last fields in the object input or definition. Even if items are not used for a particular object (e.g. Multiplier in the Surface:HeatTransfer:Sub and type=Door), the field must be included unless it is the *last field in the object*. So, for this instance, one must include a multiplier field (must be numeric and would need to obey any \minimum, \maximum rules) for doors.

Group – Location – Climate – Weather File Access

This group of objects (Location, RunPeriod, DesignDay, GroundTemperatures, SpecialDayPeriod, DaylightSavingPeriod) describes the ambient conditions for the simulation.

Location

The location class describes the parameters for the building's location. Only one location is allowed. Weather data file location, if it exists, will override any location data in the IDF. Thus, for an annual simulation, a Location does not need to be entered.

Field: LocationName

This alpha field is used as an identifying field in output reports.

Field: Latitude

This field represents the latitude (in degrees) of the facility. By convention, North Latitude is represented as positive; South Latitude as negative. Minutes should be represented in decimal fractions of 60. (15' is 15/60 or .25)

Field: Longitude

This field represents the longitude (in degrees) of the facility. By convention, East Longitude is represented as positive; West Longitude as negative. Minutes should be represented in decimal fractions of 60. (15' is 15/60 or .25)

Field: TimeZone

This field represents the time zone of the facility (relative to Greenwich Mean Time or the 0th meridian). Time zones west of GMT (e.g. North America) are represented as negative; east of GMT as positive. Non-whole hours can be represented in decimal (e.g. 6:30 is 6.5).

Field: Elevation

This field represents the elevation of the facility in meters (relative to sea level).

```
Location,
       \unique-object
  A1 , \field LocationName
       \type  alpha
  N1 , \field Latitude
       \units deg
       \minimum -90.0
       \maximum +90.0
       \default 0.0
       \note + is North, - is South, degree minutes represented in decimal (i.e. 30 minutes is .5)
       \type real
  N2 , \field Longitude
       \units deg
       \minimum -180.0
       \maximum +180.0
       \default 0.0
       \note - is West, + is East, degree minutes represented in decimal (i.e. 30 minutes is .5)
       \type real
  N3 , \field TimeZone
       \units hr (decimal)
       \minimum -12.0
       \maximum +12.0
       \default 0.0
       \note  Time relative to GMT.
       \type real
  N4 ; \field Elevation
       \units m
       \minimum -300.0
       \maximum< 6096.0
       \default 0.0
       \type real
```

Units with their abbreviations are shown in Appendix A. And, as shown in an IDF:

```
Location, DENVER COLORADO,     ! Location Name
   39.75000    ,     ! Latitude {N+ S-}
  -104.8700    ,     ! Longitude {W- E+}
  -7.000000    ,     ! TimeZoneNumber {GMT+/-}
  1610.26;           ! Elevation {m}
```

Most all examples in this document will include comment lines that illustrate each data field's value. However, this is not necessary (though it makes the IDF more readable). The previous example could also be:

```
Location, DENVER COLORADO,39.75,-104.87,-7,1610.26;
```

RunPeriod

The RunPeriod class describes the elements necessary to create a weather file simulation. Multiple run periods may be input. Currently, EnergyPlus will accept weather files in the special EnergyPlus weather format (described elsewhere) as well as BLAST formatted files. These files can describe Daylight Saving Time periods as well as holidays within their definitions. The RunPeriod class will allow the user to override the use of both the Daylight Saving Period (i.e. use or ignore) and holidays that are embedded within the weather file.

Field: Begin Month

This numeric field should contain the starting month number (1=January, 2=February, etc.) for the annual run period desired.

Field: Begin Day Of Month

This numeric field should contain the starting day of the starting month (must be valid for month) for the annual run period desired.

Field: End Month

This numeric field should contain the ending month number (1=January, 2=February, etc.) for the annual run period desired.

Field: End Day Of Month

This numeric field should contain the ending day of the ending month (must be valid for month) for the annual run period desired.

Field: Day Of Week For Start Day

For flexibility, the day of week indicated on the weather file can be overridden by this field's value. Valid days of the week (Sunday, Monday, Tuesday, Wednesday, Thursday, Friday, Saturday) must be entered in this field.

Field: Use WeatherFile Holidays/Special Days

Weather files can contain holiday designations or other kinds of special days. These day types cause a corresponding day's schedule (see SCHEDULE definitions below) to be used during that day. This field should contain the word **Yes** if holidays or other special days indicated directly on the weather file should retain their "day type" or **No** if holidays or other special days on the weather file should be ignored. Reference SpecialDayPeriod below to enter your own special days and holidays.

Note that a blank or null field in this field will indicate **Yes**.

Field: Use WeatherFile DaylightSavingPeriod

Weather files can contain indicators of Daylight Saving period days. For flexibility, you may want to ignore these designations on the weather file. This field should contain the word **Yes** if you will accept daylight saving period days as contained on the weather file (note: not all weather files may actually have this period) or **No** if you wish to ignore Daylight Saving period days that may be on the weather file.

Note that a blank or null field in this field will indicate **Yes**.

```
RunPeriod,
  N1 , \field Begin Month
       \minimum 1
       \maximum 12
       \type integer
  N2 , \field Begin Day Of Month
       \minimum 1
       \maximum 31
       \type integer
  N3 , \field End Month
       \minimum 1
       \maximum 12
       \type integer
  N4 , \field End Day Of Month
       \minimum 1
       \maximum 31
       \type integer
  A1 , \field Day Of Week For Start Day
       \note  =<blank - use WeatherFile>|Sunday|Monday|Tuesday|Wednesday|Thursday|Friday|Saturday];
       \default <blank>
       \type choice
       \key  <blank>
       \key  Sunday
       \key  Monday
       \key  Tuesday
       \key  Wednesday
       \key  Thursday
       \key  Friday
       \key  Saturday
  A2,  \field Use WeatherFile Holidays/Special Days
       \memo If yes or blank, use holidays as specified on Weatherfile.
       \memo If no, do not use the holidays specified on the Weatherfile.
       \memo Note: You can still specify holidays/special days using the SpecialDayPeriod object(s).
       \type choice
       \key <blank>  ! Yes
       \key Yes
       \key No
  A3;  \field Use WeatherFile DaylightSavingPeriod
       \memo If yes or blank, use daylight saving period as specified on Weatherfile.
       \memo If no, do not use the daylight saving period as specified on the Weatherfile.
       \type choice
       \key <blank>  ! Yes
       \key Yes
       \key No
```

And, as shown in an IDF:

```
RunPeriod,     ! Annual simulation
           5,           1,  ! Start Month , Day
           5,          10,   ! End Month, Day
            ,    ! Will use day as shown on Weatherfile
            ,    ! Will use Holidays as embedded within the weather file
            ;    ! Will use Daylight Saving Time as embedded within the weather file
```

DesignDay

The design day input describes the parameters to effect a “design day” simulation, often used for load calculations or sizing equipment. Using the values in these fields, EnergyPlus “creates” a complete day’s worth of weather data (air temperatures, solar radiation, etc.) Multiple design days may be input.

Field: DesignDayName

This field, like Location, is used simply for reporting and identification. This name must be unique among the Design Days entered.

Field: Maximum Dry-Bulb Temperature

This numeric field should contain the day's maximum dry bulb temperature in degrees Celsius. (Reference Appendix A of this document for EnergyPlus standard units and abbreviations).

Field: Daily Temperature Range

A design day can have a "high" temperature and a "low" temperature (or can be a constant temperature for each hour of the day). If there is a difference between high and low temperatures, this field should contain the difference from the high to the low. EnergyPlus distributes this range over the 24 hours in the day as shown in the figure below:

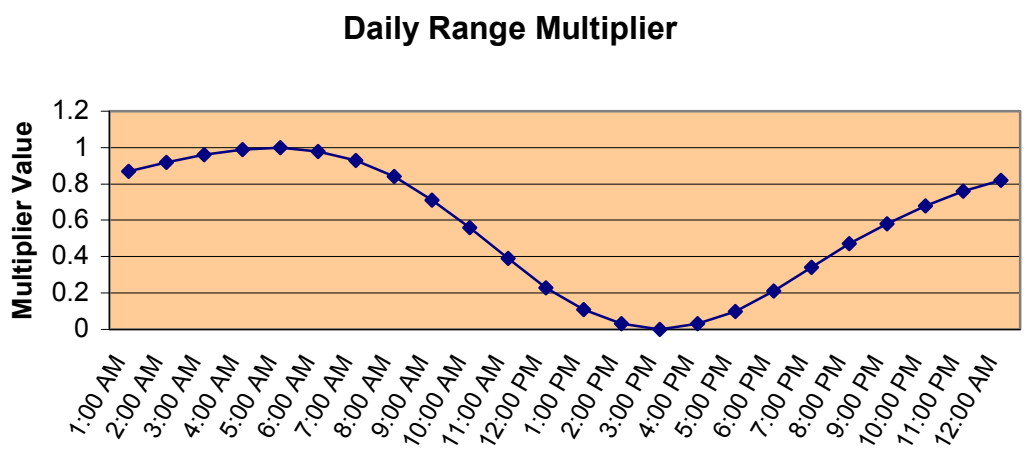

Figure 1. Daily range Multiplier for Design Days

More explicitly, EnergyPlus creates an air temperature for each timestep by using the entered maximum dry bulb temperature in conjunction with the entered daily range and the above multiplier values. The actual equation used is shown below:

$$T_{current} = T_{Max} - T_{range} \bullet T_{Multiplier}$$

where

$T_{current}$= Air temperature of current Hour of Day

T_{Max}= User supplied Max Dry Bulb Temperature

T_{range}= User supplied Daily Temperature Range

$T_{Multiplier}$= Range multiplier as shown on the above graph

The range multiplier values represent typical conditions of diurnal temperatures (i.e. the low temperature for the day occurring about 5:00 AM and the maximum temperature for the day occurring about 3:00 PM.

Field: Wet-Bulb Temperature At MaxTemp

This numeric field represents the wet bulb temperature (degrees Celsius) at the maximum temperature for the day. Using this value, along with the Maximum Dry Bulb Temperature and Barometric Pressure, a humidity ratio is calculated and then used to calculate the Wet Bulb Temperatures at each hour.

Field: Barometric Pressure

This numeric field is the constant barometric pressure (Pascals) for the entire day.

Field: Wind Speed

This numeric field is the wind speed in meters/second (constant throughout the day) for the day.

Field: Wind Direction

This numeric field is the source wind direction in degrees. By convention, winds from the North would have a value of 0., from the East a value of 90.

Field: Sky Clearness

This value represents the "clearness" value for the day. This value, along with the solar position as defined by the Location information and the date entered for the design day, help define the solar radiation values for each hour of the day.

Field: Rain Indicator

This numeric field indicates whether or not the building surfaces are wet. If the value is 1, then it is assumed that the building surfaces are wet. Wet surfaces may change the conduction of heat through the surface.

Field: Snow Indicator

This numeric field indicates whether or not there is snow on the ground. If the value is 1, then it is assumed there is snow on the ground. Snow on the ground changes the ground reflectance properties.

Field: Day Of Month

This numeric field specifies the day of the month. That, in conjunction with the month and location information, determines the current solar position and solar radiation values for each hour of the day.

Field: Month

This numeric field specifies the month. That, in conjunction with the day of the month and location information, determines the current solar position and solar radiation values for each hour of the day.

Field: Day Type

This alpha field specifies the day type for the design day. This value indicates which day profile to use in schedules. For further information, see the Schedule definition below. Note that two of the possible day types have been designated "SummerDesignDay", "WinterDesignDay" – allowing the user to customize schedules for the design conditions.

Field: Daylight Saving Time Indicator

This numeric field specifies whether to consider this day to be a "Daylight Saving Day". This essentially adds 1 hour to the scheduling times used in items with schedules.

```
DesignDay,
  A1 , \field DesignDayName
       \type alpha
  N1 , \field Maximum Dry-Bulb Temperature
       \units C
       \minimum> -70
       \maximum< 70
       \note
       \type real
  N2 , \field Daily Temperature Range
       \units C
       \minimum 0
       \type real
       \note must still produce appropriate maximum dry bulb
  N3 , \field Wet-Bulb Temperature At MaxTemp
       \units C
       \minimum> -70
       \maximum< 70
       \type real
  N4 , \field Barometric Pressure
       \units Pa
       \minimum> 70000
       \maximum< 120000
       \type real
  N5 , \field Wind Speed
       \units m/s
       \minimum 0
       \maximum 40
       \type real
  N6 , \field Wind Direction
       \units deg
       \minimum 0
       \maximum 359.9
       \note North=0.0 East=90.0
       \type real
  N7 , \field Sky Clearness
       \minimum 0.0
       \maximum 1.2
       \default 0.0
       \note 0.0 is totally unclear, 1.0 is totally clear
       \type real
  N8 , \field Rain Indicator
       \minimum 0
       \maximum 1
       \default 0
       \note 1 is raining, 0 is not
       \type integer
  N9 , \field Snow Indicator
       \minimum 0
       \maximum 1
       \default 0
       \note 1 is Snow on Ground, 0 is no Snow on Ground
       \type integer
  N10, \field Day Of Month
       \minimum 1
       \maximum 31
       \type integer
       \note must be valid for Month field
  N11, \field Month
       \minimum 1
       \maximum 12
       \type integer
  A2 , \field Day Type
       \note Day Type selects the schedules appropriate for this design day
       \type choice
       \key Sunday
       \key Monday
       \key Tuesday
       \key Wednesday
       \key Thursday
       \key Friday
```

```
      \key Saturday
      \key Holiday
      \key SummerDesignDay
      \key WinterDesignDay
      \key CustomDay1
      \key CustomDay2
N12; \field Daylight Saving Time Indicator
      \minimum 0
      \maximum 1
      \default 0
      \note 1=Yes, 0=No
      \type integer
```

SpecialDayPeriod

For weather file run periods, special day run periods can be described. These will always be in effect for the selected days in the run period.

Field: Holiday Name

This alpha field is the title for the special day period. It must be unique among all the special day period objects entered.

Field: StartDate

This field is the starting date for the special day period. Dates in this field can be entered in several ways as shown in the accompanying table:

Table 1. Date Field Interpretation

Field Contents	Interpretation
<number> / <number>	Month / Day
<number> Month	Day and Month
Month <number>	Day and Month
<number> Weekday in Month	Numbered weekday of month
Last Weekday In Month	Last weekday of month

In the table, Month can be one of (January, February, March, April, May, June, July, August, September, October, November, December). Abbreviations of the first three characters are also valid.

In the table, Weekday can be one of (Sunday, Monday, Tuesday, Wednesday, Thursday, Friday, Saturday). Abbreviations of the first three characters are also valid.

Field: duration (number of days)

This numeric field specifies how long the special day period lasts.

Field: SpecialDayType

This alpha field designates the “day type” for schedule use during the special period. It must be one of (Holiday, SummerDesignDay, WinterDesignDay, CustomDay1, CustomDay2).

```
SpecialDayPeriod,
     \memo This object sets up holidays/special days to be used during weather file
     \memo run periods.  (These are not used with DesignDay objects.)
     \memo Depending on the value in the run period, days on the weather file may also
     \memo be used.  However, the weather file specification will take precedence over
     \memo any specification shown here.  (No error message on duplicate days or overlapping
     \memo days).
 A1, \field Holiday Name
 A2, \field StartDate
     \memo  Dates can be several formats:
     \memo  <number>/<number>  (month/day)
     \memo  <number> <Month>
     \memo  <Month> <number>
     \memo <Nth> <Weekday> in <Month)
     \memo Last <WeekDay> in <Month>
     \memo <Month> can be January, February, March, April, May, June, July, August, September, October,
November, December
     \memo Months can be the first 3 letters of the month
     \memo <Weekday> can be Sunday, Monday, Tuesday, Wednesday, Thursday, Friday, Saturday
     \memo <Nth> can be 1 or 1st, 2 or 2nd, etc. up to 5(?)
 N1, \field duration (number of days)
     \minimum 1
     \maximum 366
     \default 1
 A3; \field SpecialDayType
       \note SpecialDayType selects the schedules appropriate for each day so labeled
       \type choice
       \key Holiday
       \key SummerDesignDay
       \key WinterDesignDay
       \key CustomDay1
       \key CustomDay2
```

An example in the IDF would be:

```
SpecialDayPeriod, President’s Day, 3rd Monday in February,1,Holiday;
SpecialDayPeriod, Thanksgiving, 4th Thursday in November, 1,Holiday;
SpecialDayPeriod, Halloween, 10/31, 1, Holiday;
SpecialDayPeriod, Vacation, 5/1, 14, CustomDay1;
```

DaylightSavingPeriod

Similar to a Special Day Period, a Daylight Saving Period may be entered to be applied to Run Periods. These will always be in effect, regardless of the value entered on the RunPeriod object. Note that this period will always override any daylight saving period specified in a weather file.

Field: StartDate

This is the starting date of the daylight saving period. Note that it can be entered in several formats as shown in Table 1. Date Field Interpretation.

Field: EndDate

This is the ending date of the daylight saving period. Note that it can be entered in several formats as shown in Table 1. Date Field Interpretation.

```
DaylightSavingPeriod,
     \unique-object
     \memo This object sets up the daylight saving period for any RunPeriod.
     \memo Ignores any daylightsavingperiod values on the weather file and uses this definition.
     \memo (These are not used with DesignDay objects.)
 A1, \field StartDate
 A2; \field EndDate
     \memo  Dates can be several formats:
     \memo  <number>/<number>  (month/day)
     \memo  <number> <Month>
     \memo  <Month> <number>
     \memo <Nth> <Weekday> in <Month)
     \memo Last <WeekDay> in <Month>
     \memo <Month> can be January, February, March, April, May, June, July, August, September, October,
November, December
     \memo Months can be the first 3 letters of the month
     \memo <Weekday> can be Sunday, Monday, Tuesday, Wednesday, Thursday, Friday, Saturday
     \memo <Nth> can be 1 or 1st, 2 or 2nd, etc. up to 5(?)
```

And in the IDF:

```
! U.S. Standard for Daylight Saving
DaylightSavingPeriod,1st Sunday in April, Last Sunday in October;
! Brazil standard
DaylightSavingPeriod,1st Sunday in October, Last Sunday in February;
! Syria Standard
DaylightSavingPeriod, 4/1, 10/1;
```

Of course, these could not all appear in the same IDF as only one DaylightSavingPeriod object per input file is allowed. More information on Daylight Saving Periods can be seen on the web at: http://www.webexhibits.org/daylightsaving/

GroundTemperatures

Ground temperatures are used for the current simple ground temperature model. There can only be one ground temperature object included.

Field: Month Temperature(s) – 12 fields in all

Each numeric field is the monthly ground temperature (degrees Celsius) used for the indicated month (January=1st field, February=2nd field, etc.)

```
GROUNDTEMPERATURES,
       \unique-object
  N1 , \field Jan
       \units C
       \type real
  N2 , \field Feb
       \units C
       \type real
  N3 , \field Mar
       \units C
       \type real
  N4 , \field Apr
       \units C
       \type real
  N5 , \field May
       \units C
       \type real
  N6 , \field Jun
       \units C
       \type real
  N7 , \field Jul
       \units C
       \type real
  N8 , \field Aug
       \units C
       \type real
  N9 , \field Sep
       \units C
       \type real
  N10, \field Oct
       \units C
       \type real
  N11, \field Nov
       \units C
       \type real
  N12; \field Dec
       \units C
       \type real
```

And, the IDF example:

```
GroundTemperatures,  1.22222233E+01,  1.27777786E+01,  1.44444447E+01,  1.66666679E+01,  1.94444447E+01,
2.33333340E+01,  2.22222233E+01,  2.00000000E+01,  1.77777786E+01,  1.66666679E+01,  1.44444447E+01,
1.27777786E+01;
```

Climate Group Outputs

The description here will be specific to the climate values. For a general output discussion see the Input for Output and Output sections of this document.

Climate related variables appear in two places for EnergyPlus outputs. When the simple (monthly) GroundTemperature input is done and for all location data, lines appear in the eplusout.eio file:

```
! <GroundTemperatures>, Months From Jan to Dec {Deg C}
 GroundTemperatures,  12.22,  12.78,  14.44,  16.67,  19.44,  23.33,  22.22,  20.00,  17.78,  16.67,
14.44,  12.78
! <Location>, Location Name, Latitude, Longitude, Time Zone Number, Elevation {m}
 Location, DENVER COLORADO,   39.75, -104.87,   -7.00,      1610.26
```

In addition for each “environment” simulated, information about the environment is shown:

```
! <Environment>,Environment Name,Environment Type, Start Date, End Date, Start DayOfWeek, Duration {#days}
! <Environment:Special Days>, Special Day Type, Source, Start Date, Duration {#days}
! <Environment:Daylight Saving>, Daylight Saving Indicator, Source, Start Date, End Date
```

For example, a DesignDay:

```
 Environment,COLORADO SPRINGS COLORADO WINTER,DesignDay, 1/21, 1/21,MONDAY,  1
 Environment:Daylight Saving,No
```

Or a RunPeriod:

```
 Environment,COLORADO SPRINGS COLORADO SUMMER,DesignDay, 7/21, 7/21,MONDAY,  1
 Environment:Daylight Saving,No
 Environment,CHANUTE AFB  ILLINOIS 1440 1957 BLAST WE,WeatherRunPeriod, 5/ 1, 5/10,WEDNESDAY, 10
 Environment:Daylight Saving,Yes,WeatherFile, 4/28,10/27
 Environment:Special Days,Holiday,WeatherFile, 1/ 1,  1
 Environment:Special Days,Holiday,WeatherFile, 2/18,  1
 Environment:Special Days,Holiday,WeatherFile, 5/27,  1
 Environment:Special Days,Holiday,WeatherFile, 7/ 4,  1
 Environment:Special Days,Holiday,WeatherFile, 9/ 2,  1
 Environment:Special Days,Holiday,WeatherFile,10/14,  1
 Environment:Special Days,Holiday,WeatherFile,11/11,  1
 Environment:Special Days,Holiday,WeatherFile,11/28,  1
 Environment:Special Days,Holiday,WeatherFile,12/25,  1
```

Other variables are available at timestep and higher resolutions. Below is a variable dictionary of these variables:

```
Zone,Average,Outdoor Dry Bulb [C]
Zone,Average,Outdoor Barometric Pressure [Pa]
Zone,Average,Outdoor Wet Bulb [C]
Zone,Average,Outdoor Humidity Ratio [kgWater/kgAir]
Zone,Average,Wind Speed [m/s]
Zone,Average,Wind Direction [degree]
Zone,Average,Sky Temperature [C]
Zone,Average,Diffuse Solar [W/m2]
Zone,Average,Direct Solar [W/m2]
Zone,Average,Ground Reflected Solar [W/m2]
Zone,Average,Ground Temperature [C]
Zone,Average,Outdoor Dew Point [C]
Zone,Average,Outdoor Enthalpy [J/kg]
Zone,Average,Outdoor Relative Humidity [%]
Zone,Average,Outdoor Air Density [kg/m3]
```

Group – Simulation Parameters

This group of objects (Building, Timestep in Hour, Sky Radiance Distribution, Inside Convection Algorithm, Outside Convection Algorithm, Shadowing Calculations, Zone Volume Capacitance Multiplier) influences the simulation in various ways.

TimeStep In Hour

Field: TimeStep in Hour

This parameter specifies how many time steps in each hour will be used for the main “time step” simulation. Note that the system/HVAC/plant simulation has an internally controlled “variable” time step, which will reduce as necessary (to converge) from this basic time step.

```
TIMESTEP IN HOUR,
       \unique-object
  N1 ; \field Time Step in Hour
       \note Number in hour: validity 1 to 6: 4 suggested
       \note Should be evenly divisible into 60
       \note Specifying 6 as maximum as higher values may cause instability.
       \default 4
       \type integer
       \minimum 1
       \maximum 6
```

And, the IDF example:

```
TIMESTEP IN HOUR, 6;  !Suggested default for most system simulations
```

Suggested defaults are 4 for non-HVAC simulations, 6 for simulations with HVAC.

Building

These are parameters that control certain elements of the simulation.

```
BUILDING,
       \unique-object
       \required-object
  A1 , \field Building Name
  N1 , \field North Axis
       \note degrees from true North
       \units deg
       \type real
  A2 , \field Terrain
       \note  Country=FlatOpenCountry | Suburbs=RoughWoodedCountryTownsSuburbs | City=CityCenter
       \type choice
       \key Country
       \key Suburbs
       \key City
  N3 , \field Loads Convergence Tolerance Value
       \type real
       \minimum> 0.0
  N4 , \field Temperature Convergence Tolerance Value
       \type real
       \minimum> 0.0
  A3 ; \field Solar Distribution
       \note  MinimalShadowing | FullExterior | FullInteriorAndExterior
       \type choice
       \key MinimalShadowing
       \key FullExterior
       \key FullInteriorAndExterior
```

And example from and IDF:

```
BUILDING,PSI HOUSE DORM AND OFFICES,  ! Building Name
   36.87000    ,   ! Building Azimuth
  Suburbs,   ! Building Terrain
  3.9999999E-02,   ! Loads Convergence Tolerance
  0.4000000    ,   ! Temperature Convergence Tolerance
    FullInteriorAndExterior;   ! Solar Distribution
```

The Building class describes parameters that are used during the simulation of the building.

Field: Building Name

Building name is specified merely for output convenience.

Field: North Axis

The Building North Axis is **specified relative to true North**. Buildings frequently do not line up with true north. For convenience, one may enter surfaces in a “regular” coordinate system and then shift them via the use of the North Axis. The value is specified in degrees from “true north” (clockwise is positive).

The figure below shows how the building north axis can be rotated to correspond with one of the major axes of an actual building. The relevance of this field is described more completely under “SurfaceGeometry”; in particular, the value of “North Axis” is *ignored* if a coordinate system other than “relative” is used.

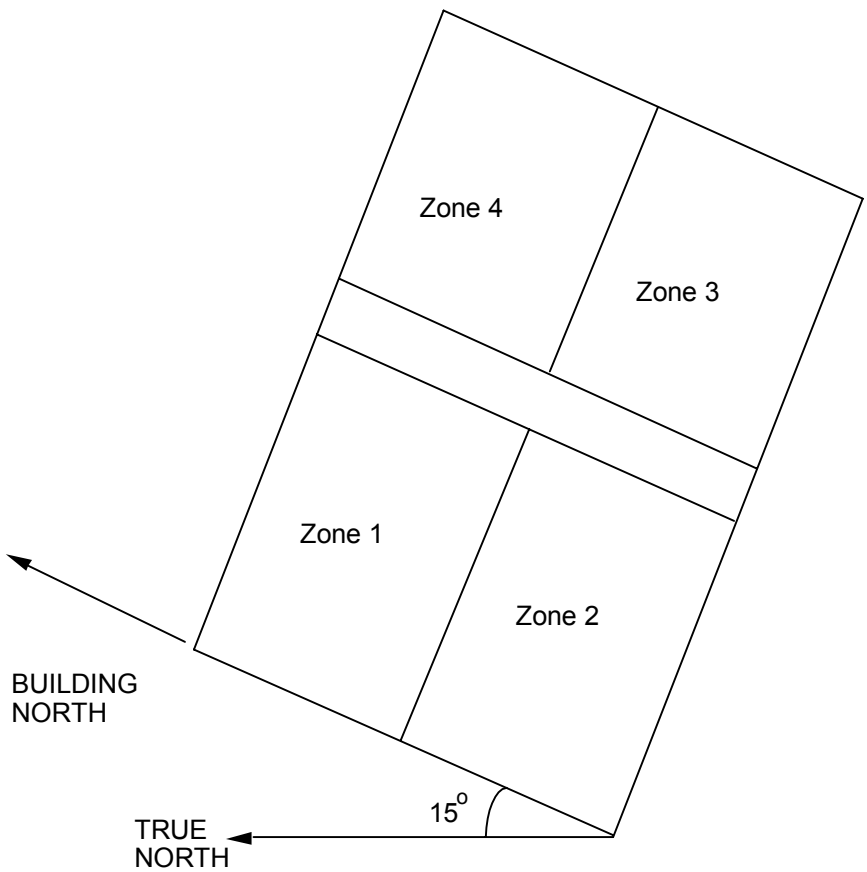

Figure 2. Illustration of Building North Axis

Field: Terrain

The wind velocity as a function of height above ground is assumed to follow the power law:

$$\frac{V_z}{V_g} = \left(\frac{Z}{A_g} \right)^{1/\alpha}$$

where

V_z = wind speed at height z above ground

V_g = wind speed above the boundary layer

Z_g = height of boundary layer

α = exponent (see description below)

Z_g and α are dependent upon terrain type.

Terrain Type Value	Terrain Description	Z_g	α
Country	Flat, Open Country	275 m	7.0
Suburbs	Rough, Wooded Country, Suburbs	400 m	3.5
City	Towns, city outskirts, center of large cities	520 m	2.5

Typically, wind speed measurements are taken at 9.14 m above ground and V_z can be computed from the reported wind speed (V) by the following formula:

$$V_Z = V * \left(\frac{Z}{9.14} \right)^{1/\alpha}$$

Reference: A.G. Davenport, Wind Loads on Structures, Technical Paper No. 88, Division of Building Research, Building Research Council, Ottawa, CA, 1960.

Field: Loads convergence

This value represents the number at which the loads values must agree before “convergence” is reached.

Field: Temperature Convergence

This value represents the number at which the zone temperatures must agree (from previous iteration) before “convergence” is reached.

Convergence of the simultaneous heat balance/HVAC solution is reached when either the loads or temperature criterion is satisfied.

Field: Solar Distribution

Setting this value determines how EnergyPlus will treat beam sunlight entering a zone through windows. When using **MinimalShadowing**, all beam sunlight is assumed incident on the floor, where it is absorbed according to the floor's solar absorptance. Any not absorbed by the floor is added to the transmitted diffuse radiation, which is uniformly incident on all interior surfaces. If no floor is present in the zone, the incident beam solar radiation is absorbed on all interior surfaces. The zone heat balance is then applied at each surface and on the zone's air with the absorbed radiation being treated as a flux on the surface.

Using **FullExterior**, shadow patterns on exterior surfaces caused by detached shading, wings, overhangs, and exterior surfaces of all zones are now computed. Beam sunlight transmitted through windows is assumed to be incident on the floor, where it is absorbed according to the floor's solar absorptance. Any not absorbed is added to the transmitted diffuse radiation that is uniformly incident on all interior surfaces. If there is no floor present, the incident beam solar radiation is handled the same as for **MinimalShadowing**.

Using **FullInteriorAndExterior**, EnergyPlus will then calculate the amount of beam radiation falling on each surface in the zone by projecting the sun's rays through the windows. If this option is used, the user should ensure that the surfaces of the zone totally enclose a space.

Airflow Model

EnergyPlus allows users to model airflow into and through a building using either a simplified infiltration model and user-specified interzone airflows, or the COMIS multi-zone airflow model. COMIS, which stands for "Conjunction of Multi-zone Infiltration Specialists", is a network-based multi-zone airflow model developed by a multinational team in the framework of International Energy Agency’s Annex 23 for simulating airflows through the building fabric due to infiltration or natural ventilation, and from zone to zone, as well as the interactions of the HVAC system, ducts, and exhaust hoods and fans. In the Beta 4 version, only the air flows through the building fabric

and from zone to zone has been implemented, and not the air flow through the ducts and mechanical systems.

Field: AirFlowModelValue

This alpha field designates which kind of airflow model will be used during the simulation. The choices are “Simple” or “COMIS”. For the Simplified Air Flow Model, the allowable inputs are then **Infiltration**, **Mixing**, and **Cross Mixing**. These are described later under “Group AirFlow”. For the COMIS Multi-zone Air Flow Model, the allowable inputs are described in the second part of the AirFlow Group. All of the COMIS-related inputs begin with the word "COMIS".

```
Airflow Model,
      \unique-object
      \memo See Group Air Flow for inputs.
 A1 ; \field AirFlowModelValue
      \type choice
      \key Simple
      \key COMIS
```

An IDF example :

```
AIRFLOW MODEL, COMIS ;    ! Use COMIS Air Flow Model
```

Inside Convection Algorithm

Three interior convection models may be selected in EnergyPlus. The simple natural convection model applies constant heat transfer coefficients depending on the surface orientation. The detailed natural convection model correlates the heat transfer coefficient to the temperature difference for various orientations. This model is based on flat plate experiments. The third model is a mixed and forced convection model for ceiling diffuser configurations. The model correlates the heat transfer coefficient to the air change rate for ceilings, walls and floors. These correlations are based on experiments performed in an isothermal room with a cold ceiling jet. To avoid discontinuities in surface heat transfer rate calculations, the correlations have been extrapolated beyond the lower limit of the data set (3 ACH) to a natural convection limit which is applied during the hours when the system is off.

```
INSIDE CONVECTION ALGORITHM,
       \unique-object
  A1 ; \field InsideConvectionValue
       \note  Simple   = Constant Natural Convection
       \note  Detailed = Variable Natural Convection based on temperature difference
       \note  CeilingDiffuser =  ACH based Forced and Mixed Convection correlations
       \note for ceiling diffuser configuration with Simple Natural Convection limit
       \type choice
       \key Simple
       \key Detailed
       \key CeilingDiffuser
```

IDF Example:

```
INSIDE CONVECTION ALGORITHM,Detailed;
```

Outside Convection Algorithm

This is likely a deprecated feature – the final version of EnergyPlus will use the more Detailed model. If not a deprecated feature, this should be described (here? Engineering Doc?)

```
OUTSIDE CONVECTION ALGORITHM,
       \unique-object
  A1 ; \field OutsideConvectionValue
       \note  Simple/ASHRAE | Detailed
       \type choice
       \key Simple
       \key Detailed
```

IDF Example:

```
OUTSIDE CONVECTION ALGORITHM,Detailed;
```

Solution Algorithm Selection

The solution algorithm selection provides a way to select what type of heat in moisture transfer algorithm will be used across the building constructions.

Field: SolutionAlgo

Three values are allowed to select which solution will be used. The **CTF** selection is a sensible heat only solution and does not take into account moisture storage or diffusion in the construction elements. The **MTF** selection is a simultaneous heat and mass transfer solution with vapor adsorption taking place in the building construction. This solution technique uses the Evaporation-Condensation theory and needs additional moisture material property information. The **EMPD** selection is a sensible heat diffusion and an inside surface moisture storage algorithm that also needs additional moisture material property information. See the appropriate moisture material property objects for additional information.

```
SOLUTION ALGORITHM,
       \Determines which Heat Balance Algorithm will be used ie. CTF, MTF, or EMPD
       \unique-object
  A1 ; \field SolutionAlgo
       \type choice
       \key CTF
       \key MTF
       \key EMPD
       \default CTF
```

And, a default IDF example

```
SOLUTION ALGORITHM,CTF;   ! Solution Algorithm
```

Sky Radiance Distribution

```
SKY RADIANCE DISTRIBUTION,
       \unique-object
  N1 ; \field
       \note  0=isotropic | 1=anisotropic
       \default 1
       \type integer
       \minimum 0
       \maximum 1
```

For the purposes of development and possibly through beta testing, this option will allow selection of the old algorithm (isotropic sky) or the new replacement Perez model for sky and diffuse shading (anisotropic). For each exterior surface, a factor is calculated that multiplies the sky view factor for the surface to account for the anisotropy of the sky radiance distribution. The anisotropy of the sky radiance affects sky diffuse solar incident on sloped surfaces, like walls. The sky diffuse solar shadowing works by dividing the sky dome into patches and using the direct solar shadowing calculations to get the shading from each patch. Adding the effects from all the patches gives sky diffuse shading factors. This automatic sky diffuse shading overrides user input for the sky view factor of surfaces in the diffuse solar calculation (but retains the sky view factor for exterior IR calculations). Note that the default is Anisotropic.

An IDF example:

```
SKY RADIANCE DISTRIBUTION,0; ! Sky Radiance (isotropic)
```

Shadowing Calculations

In order to speed up the calculations, shadowing calculations (sun position, etc) are performed over a period of days. By default, this is 20 days throughout a weather run period.

Field: Period_for_Calculations

This numeric field will cause the shadowing calculations to be done periodically using the number in the field as the number of days in each period. Using this field will allow you to synchronize the shadowing calculations with changes in shading devices. Using the default of 20 days in each period is the average number of days between significant changes in solar position angles.

```
SHADOWING CALCULATIONS,
       \unique-object
  N1 ; \field Period_for_calculations
       \note 0=Use Default Periodic Calculation|<else> calculate every <value> day
       \note only really applicable RunPeriods
```

If shadowing surfaces are used with the transmittance property, the user should be careful to synchronize this calculation with the shading surfaces (or use 1, which will be the most accurate but will be time consuming). Example:

```
SHADOWING CALCULATIONS,1;
```

Zone Volume Capacitance Multiplier

Zone Volume Capacitance Multiplier = 1.0 is the capacitance of the air in the volume of the specified zone. This multiplier can be increased if the zone air capacitance needs to be increased for stability of the simulation.

```
ZONE VOLUME CAPACITANCE MULTIPLIER,
       \unique-object
  N1 ; \field Capacitance Multiplier
       \type real
       \default 1.0
       \note Used for Stability in Predictor Corrector Step by Increasing Reactive Capacity
```

One of the few EnergyPlus defaulted items. If not defined, it defaults to 1.0.

Run Control

The input for Run Control allows the user to specify what kind of calculations a given EbergyPlus simulation will perform. For instance the user may want to perform one or more of the sizing calculations but not proceed to a annual weather file simulation. Or the user might have all flow rates and equipment sizes already specified and desire an annual weather without any preceding sizing calculations. The Run Control input allows all permutations of run selection by means of 5 yes/no inputs.

Note that only one Run Control object is permitted for each EnergyPlus input file.

Field: Do the zone sizing calculation

Input is Yes or No. The default is No.

Field: Do the system sizing calculation

Input is Yes or No. The default is No.

Field: Do the plant sizing calculation

Input is Yes or No. The default is No.

Field: Do the design day simulations

Input is Yes or No. The default is Yes.

Field: Do the weather file simulation

Input is Yes or No. The default is Yes.

The full IDD specification follows:

```
RUN CONTROL,
       \unique-object
  A1, \field Do the zone sizing calculation
      \type choice
      \key Yes
      \key No
  A2, \field Do the system sizing calculation
      \type choice
      \key Yes
      \key No
  A3, \field Do the plant sizing calculation
      \type choice
      \key Yes
      \key No
  A4, \field Do the design day simulations
      \type choice
      \key Yes
      \key No
  A5; \field Do the weather file simulation
      \type choice
      \key Yes
      \key No
```

An IDF example:

```
RUN CONTROL,
   Yes, !zone sizing
   No,  ! system sizing
   No,  ! plant sizing
   No,  ! design day full simulation
   No;  ! weather file full simulation
```

Simulation Parameter Outputs

These appear in the eplusout.eio file:

```
! <Building Information>, Building Name,North Axis,Terrain,  Loads Convergence Tolerance Value,
Temperature Convergence Tolerance Value,  Solar Distribution
 Building, PSI HOUSE DORM AND OFFICES,  36.870,Suburbs,   0.04000,   0.40000,FullInteriorAndExterior
! Inside Convection Algorithm, Value {Simple/ASHRAE | Detailed}
Inside Convection Algorithm,Detailed
! Outside Convection Algorithm, Value {Simple/ASHRAE | Detailed}
Outside Convection Algorithm,Detailed
! Solution Algorithm, Value {CTF | EMPD | MTF}
Solution Algorithm, CTF
! Sky Radiance Distribution, Value {0=Isotropic | 1=Anisotropic}
Sky Radiance Distribution, 1
```

No reporting is available (yet) for Zone Volume Capacitance Multiplier nor Shadowing Calculations.

Group – Schedules

This group of objects allows the user to influence scheduling of many items (such as occupancy density, lighting, thermostatic controls, occupancy activity). In addition, schedules are used to control shading element density on the building.

EnergyPlus schedules consist of three pieces: a day description, a week description, and an annual description. An optional element is the schedule type. Each description level builds off the previous sub-level. The day description is simply a name and the 24 hourly values to be associated with that name. The week description also has an identifier (name) and twelve additional names corresponding to previously defined day descriptions. There are names for each individual day of the week plus holiday, summer design day, winter design day and two more custom day designations. Finally, the annual schedule contains an identifier and the names and

FROM-THRU dates of the week schedules associate with this annual schedule. The annual schedule can have several FROM-THRU date pairs.

Schedules are processed by the EnergyPlus Schedule Manager, stored within the Schedule Manager and are accessed through module routines to get the basic values (timestep, hourly, etc).

ScheduleType

A "schedule type" can be used to validate portions of the other schedules.

Field: ScheduleType Name

This alpha field should contain a unique (within the schedule types) designator. It is referenced wherever "ScheduleTypes" can be referenced.

Field: range

Since schedule values, in their base descriptions, are all numeric, this field will represent the min and max range for the values. If this field is left blank, then the schedule type is not limited to a minimum/maximum value range.

Field: Numeric Type

This field designates how the range values are validated. Using **CONTINUOUS** in this field allows for all numbers, including fractional amounts, within the range to be valid. Using **DISCRETE** in this field allows only integer values between the minimum and maximum range values to be valid.

```
ScheduleType,
       \memo ScheduleType contains ScheduleTypes for DAYSCHEDULE, and SCHEDULE
  A1,  \field ScheduleType Name
       \reference ScheduleTypeNames
       \memo used to validate ScheduleType in SCHEDULE and DAYSCHEDULE objects
  A2,  \field range
       \note put in minimum:maximum here or blank if not a limited value, e.g. 0.0:1.0 for fraction
  A3;  \field Numeric Type
       \note Numeric type is either Continuous (all numbers within the min and
       \note max are valid or Discrete (only integer numbers between min and
       \note max are valid.  (Could also allow REAL and INTEGER to mean the
       \note same things
       \type choice
       \key CONTINUOUS
       \key DISCRETE
```

Several IDF Examples will illustrate the use:

```
ScheduleType,Any Number;  ! Not limited
ScheduleType,Fraction, 0.0 : 1.0 ,CONTINUOUS;
ScheduleType,Temperature,-60:200,CONTINUOUS;
ScheduleType,Control Type,0:4,DISCRETE;
ScheduleType,On/Off,0:1,DISCRETE;
```

DaySchedule

The DaySchedule contains an hour-by-hour profile for a single simulation day.

Field: Name

This field should contain a unique (within all DaySchedules) designation for this schedule. It is referenced by WeekSchedules to define the appropriate schedule values.

Field: ScheduleType

This field contains a reference to the ScheduleType. If found in a list of ScheduleTypes (see above), then the restrictions on the ScheduleType will be used to validate the hourly field values (below).

Field: Hour Values (1-24)

These fields contain the hourly values for each of the 24 hours in a day. (Hour field 1 represents clock time 00:00:01 AM to 1:00:00 AM, hour field 2 is 1:00:01 AM to 2:00:00 AM, etc.) The values in these fields will be passed to the simulation as indicated for "scheduled" items.

```
DAYSCHEDULE,
       \memo A DAYSCHEDULE contains 24 values for each hour of the day.
  A1 , \field Name
       \type alpha
       \reference DayScheduleNames
  A2 , \field ScheduleType
       \type object-list
       \object-list ScheduleTypeNames
  N1 , \field Hour 1
       \type real
  N2 , \field Hour 2
       \type real
-- etc to 24 hour values
```

For brevity each of the hour fields is not listed here – see the IDD for complete definition. An IDF example:

```
DAYSCHEDULE, Day On Peak, Fraction,
        0.,0.,0.,0.,0.,0.,0.,0.,0.,1.,1.,1.,1.,1.,1.,1.,1.,1.,0.,0.,0.,0.,0.,0.;
```

WeekSchedule

Field: Name

This field should contain a unique (within all WeekSchedules) designation for this schedule. It is referenced by Schedules to define the appropriate schedule values.

Field: Day Type Fields (12 day types – Sunday, Monday, …)

These fields contain DaySchedule names for the appropriate day types. Days of the week (or special days as described earlier) will then use the indicated hourly profile as the actual schedule value.

```
WEEKSCHEDULE,
       \memo  A WEEKSCHEDULE contains 12 DAYSCHEDULES, one for each day type.
  A1 , \field Name
       \reference WeekScheduleNames
       \type alpha
  A2 , \field Sunday DAYSCHEDULE Name
  A3 , \field Monday DAYSCHEDULE Name
  A4 , \field Tuesday DAYSCHEDULE Name
  A5 , \field Wednesday DAYSCHEDULE Name
  A6 , \field Thursday DAYSCHEDULE Name
  A7 , \field Friday DAYSCHEDULE Name
  A8 , \field Saturday DAYSCHEDULE Name
  A9 , \field Holiday DAYSCHEDULE Name
  A10, \field SummerDesignDay DAYSCHEDULE Name
  A11, \field WinterDesignDay DAYSCHEDULE Name
  A12, \field CustomDay1 DAYSCHEDULE Name
  A13; \field CustomDay2 DAYSCHEDULE Name
```

An IDF example:

```
WEEKSCHEDULE, Week on Peak,
        Day On Peak,Day On Peak,Day On Peak,
        Day On Peak,Day On Peak,Day On Peak,
        Day On Peak,Day On Peak,Day On Peak,
        Day On Peak,Day On Peak,Day On Peak;
```

Schedule

Each schedule entered must cover the entire year or a fatal error will result.

Field: Name

This field should contain a unique (within all Schedules) designation for this schedule. It is referenced by various "scheduled" items (e.g. Lights, People, Infiltration) to define the appropriate schedule values.

Field: ScheduleType

This field contains a reference to the ScheduleType. If found in a list of ScheduleTypes (see above), then the restrictions on the ScheduleType could be used to validate the referenced WeekSchedule (which reference DaySchedule) hourly field values. This feature is not used for the Schedule command currently (beta 4).

Field Set (WeekSchedule, Start Month and Day, End Month and Day)

Each of the designated fields is used to fully define the schedule values for the indicated time period). Up to 52 sets can be used. An error will be noted and EnergyPlus will be terminated if an incomplete set is entered. Missing time periods will also be noted as warning errors; for these time periods a zero (0.0) value will be returned when a schedule value is requested. Each of the sets has the following 5 fields:

Field: Name of WEEKSCHEDULE

This field contains the appropriate WeekSchedule name for the designated time period.

Field: Start Month

This numeric field is the starting month for the schedule time period.

Field: Start Day

This numeric field is the starting day for the schedule time period.

Field: End Month

This numeric field is the ending month for the schedule time period.

Field: End Day

This numeric field is the ending day for the schedule time period.

```
SCHEDULE,
       \memo A SCHEDULE contains from 1 to 52 WEEKSCHEDULES
  A1 , \field Name
       \type alpha
       \reference ScheduleNames
  A2 , \field ScheduleType
       \type object-list
       \object-list ScheduleTypeNames
  A3 , \field Name of WEEKSCHEDULE 1
       \type object-list
       \object-list WeekScheduleNames
  N1 , \field Start Month 1
       \type integer
       \minimum 1
       \maximum 12
  N2 , \field Start Day 1
       \type integer
       \minimum 1
       \maximum 31
  N3 , \field End Month 1
       \type integer
       \minimum 1
       \maximum 12
  N4 , \field End Day 1
       \type integer
       \minimum 1
       \maximum 31
  A4 , \field Name of WEEKSCHEDULE 2
       \type object-list
       \object-list WeekScheduleNames
  N5 , \field Start Month 2
       \type integer
       \minimum 1
       \maximum 12
  N6 , \field Start Day 2
       \type integer
       \minimum 1
       \maximum 31
  N7 , \field End Month 2
       \type integer
       \minimum 1
       \maximum 12
  N8 , \field End Day 2
       \type integer
       \minimum 1
       \maximum 31
-- etc to 52 weekschedule "field sets"
```

For brevity, the entire definition of week schedules is not included here. See the actual IDD for full definition.

Note that there are many possible periods to be described. An IDF example with a single period:

```
SCHEDULE, On Peak, Fraction,
        Week On Peak, 1,1, 12,31;
```

And a multiple period illustration:

```
SCHEDULE,CoolingCoilAvailSched,Fraction,
        FanAndCoilAllOffWeekSched, 1,1, 3,31,
        FanAndCoilSummerWeekSched, 4,1, 9,30,
        FanAndCoilAllOffWeekSched, 10,1, 12,31;
```

The following definition will generate an error (if any scheduled items are used in the simulation):

```
SCHEDULE,MySchedule,Fraction,4,1,9,30;
```

Schedule Outputs

No direct outputs relate to schedules.

Group – Surface Construction Elements

This group of objects describes the physical properties and configuration for the building envelope and interior elements. That is, the walls, roofs, floors, windows, doors for the building.

Specifying the Building Envelope

Building element constructions in EnergyPlus are built from the basic thermal and other material property parameters in physical constructions. Materials are specified by types and named. Constructions are defined by the composition of materials. Finally, surfaces are specified for the building with geometric coordinates as well as referenced constructions.

Materials

There are three material "types" which may be used to describe layers within opaque construction elements. The choice of which of these types to use is left up to the user. However, some guidance as to which material type to use is appropriate before describing each in detail. The three opaque types are:

- Material:Regular
- Material:Regular-R
- Material:Air

Material:Regular is the "preferred" type of material. This requires knowledge of many of the thermal properties of the material, but it allows EnergyPlus to take into account the thermal mass of the material and thus allows the evaluation of transient conduction effects. Material:Regular-R is similar in nature but only requires the thermal resistance (R-value) rather than the thickness, thermal conductivity, density, and specific heat. Note that using a simple R-value only material forces EnergyPlus to assume steady state heat conduction through this material layer. Finally, Material:Air should only be used for an air gap between other layers in a construction. This type assumes that air is sufficiently lightweight to require only an R-value. In addition, since it is not exposed to any external environment, surface properties such as absorptance are not necessary.

There are two material additions that can be made to the basic material properties. These two additional material types are:

- MaterialProperty:Moisture:MTF
- MaterialProperty:Moisture:EMPD

These two material objects are used in conjunction with the basic material specification and reference back to the name of the basic material type. Without the basic material type specified the program, will give a severe error and terminate. Specifying the moisture materials and changing the Solution Algorithm to a moisture simulation will allow the moisture simulation to take place.

Material:Regular

This definition should be used when the four main thermal properties (thickness, conductivity, density, and specific heat) of the material are known. This syntax is used to describe opaque construction elements only.

Field: Name

This field is a unique reference name that the user assigns to a particular material. This name can then be referred to by other input data (ref: Construction).

Field: Roughness

This field is a character string that defines the relative roughness of a particular material layer. This parameter only influences the convection coefficients, more specifically the exterior convection coefficient. A special keyword is expected in this field with the options being "VeryRough", "MediumRough", "Rough", "Smooth", "MediumSmooth", and "VerySmooth" in order of roughest to smoothest options.

Field: Thickness

This field characterizes the thickness of the material layer in meters. This should be the dimension of the layer in the direction perpendicular to the main path of heat conduction. This value must be a positive.

Field: Conductivity

This field is used to enter the thermal conductivity of the material layer. Units for this parameter are W/(m-K). Thermal conductivity must be greater than zero.

Field: Density

This field is used to enter the density of the material layer in units of kg/m^3. Density must be a positive quantity.

Field: Specific Heat

This field represents the specific heat of the material layer in units of J/(kg-K). Note that these units are most likely different than those reported in textbooks and references which tend to use kJ/(kg-K) or J/(g-K). They were chosen for internal consistency within EnergyPlus. Only positive values of specific heat are allowed.

Field: Absorptance:Thermal

The thermal absorptance field in the Material input syntax represents the fraction of incident long wavelength radiation that is absorbed by the material. This parameter is used when calculating the long wavelength radiant exchange between various surfaces and affects the surface heat balances (both inside and outside as appropriate). Values for this field must be between 0.0 and 1.0 (with 1.0 representing "black body" conditions).

Field: Absorptance:Solar

The solar absorptance field in the Material input syntax represents the fraction of incident short wavelength (solar) radiation that is absorbed by the material. This parameter is used when calculating the amount of incident solar radiation absorbed by various surfaces and affects the surface heat balances (both inside and outside as appropriate). Values for this field must be between 0.0 and 1.0.

Field: Absorptance:Visible

The visible absorptance field in the Material input syntax represents the fraction of incident visible wavelength radiation that is absorbed by the material. Visible wavelength radiation is slightly different than solar radiation in that the visible band of wavelengths is much more narrow while solar radiation includes the visible spectrum as well as infrared and ultraviolet wavelengths. This parameter is used when calculating the amount of incident visible radiation absorbed by various surfaces and affects the surface heat balances (both inside and outside as appropriate) as well as the daylighting calculations. Values for this field must be between 0.0 and 1.0.

```
MATERIAL:REGULAR,
  A1 , \field Name
       \type alpha
       \reference MaterialName
  A2 , \field Roughness
       \type choice
       \key VeryRough
       \key MediumRough
       \key Rough
       \key Smooth
       \key MediumSmooth
       \key VerySmooth
  N1 , \field Thickness
       \units m
       \type real
       \minimum> 0
  N2 , \field Conductivity
       \units W/m-K
       \type real
       \minimum> 0
  N3 , \field Density
       \units kg/m3
       \type real
       \minimum> 0
  N4 , \field Specific Heat
       \units J/kg-K
       \type real
       \minimum> 0
  N5 , \field Absorptance:Thermal
       \type real
       \minimum> 0
       \default .9
       \maximum 1
  N6 , \field Absorptance:Solar
       \type real
       \default .7
       \minimum 0
       \maximum 1
  N7 ; \field Absorptance:Visible
       \type real
       \minimum 0
       \default .7
       \maximum 1
```

An IDF example:

```
MATERIAL:Regular,A2 - 4 IN DENSE FACE BRICK,  ! Material Name
 Rough,  ! Roughness
  0.1014984    ,  ! Thickness {m}
   1.245296    ,   ! Conductivity {W/M*K}
   2082.400    ,   ! Density {Kg/M**3}
  920.4800    ,   ! Specific Heat {J/Kg*K}
  0.9000000    ,   ! Thermal Absorptance
  0.9300000    ,   ! Solar Absorptance
  0.9300000    ;   ! Visible Absorptance
```

Material:Regular-R

Use this definition when only the Thermal Resistance (R value) of the material is known. This object is used to describe opaque construction elements.

Field: Name

This field is a unique reference name that the user assigns to a particular material. This name can then be referred to by other input data (ref: Construction, Movable Insulation).

Field: Roughness

This field is a character string that defines the relative roughness of a particular material layer. This parameter only influences the convection coefficients, more specifically the exterior convection coefficient. A special keyword is expected in this field with the options being “VeryRough”, “MediumRough”, “Rough”, “Smooth”, “MediumSmooth”, and “VerySmooth” in order of roughest to smoothest options.

Field: Thermal Resistance

This field is used to enter the thermal resistance (R-value) of the material layer. Units for this parameter are (m^2-K)/W. Thermal resistance must be greater than zero. Note that most R-values in the USA are calculated in Inch-Pound units and must be converted to the SI equivalent.

Field: Absorptance:Thermal

The thermal absorptance field in the Material input syntax represents the fraction of incident long wavelength radiation that is absorbed by the material. This parameter is used when calculating the long wavelength radiant exchange between various surfaces and affects the surface heat balances (both inside and outside as appropriate). Values for this field must be between 0.0 and 1.0 (with 1.0 representing “black body” conditions).

Field: Absorptance:Solar

The solar absorptance field in the Material input syntax represents the fraction of incident short wavelength (solar) radiation that is absorbed by the material. This parameter is used when calculating the amount of incident solar radiation absorbed by various surfaces and affects the surface heat balances (both inside and outside as appropriate). Values for this field must be between 0.0 and 1.0.

Field: Absorptance:Visible

The visible absorptance field in the Material input syntax represents the fraction of incident visible wavelength radiation that is absorbed by the material. Visible wavelength radiation is slightly different than solar radiation in that the visible band of wavelengths is much more narrow while solar radiation includes the visible spectrum as well as infrared and ultraviolet wavelengths. This parameter is used when calculating the amount of incident visible radiation absorbed by various surfaces and affects the surface heat balances (both inside and outside as appropriate) as well as the daylighting calculations. Values for this field must be between 0.0 and 1.0.

```
MATERIAL:REGULAR-R,
  A1 , \field Name
       \type alpha
       \reference MaterialName
  A2 , \field Roughness
       \type choice
       \key VeryRough
       \key MediumRough
       \key Rough
       \key Smooth
       \key MediumSmooth
       \key VerySmooth
  N1 , \field Thermal Resistance
       \units m2-K/W
       \type real
       \minimum> 0
  N2 , \field Absorptance:Thermal
       \type real
       \minimum> 0
       \default .9
       \maximum 1
  N3 , \field Absorptance:Solar
       \type real
       \minimum 0
       \default .7
       \maximum 1
  N4 ; \field Absorptance:Visible
       \type real
       \minimum 0
       \default .7
       \maximum 1
```

An IDF example:

```
MATERIAL:Regular-R,R13LAYER,  ! Material Name
 Rough,  ! Roughness
   2.290965    ,  ! Resistance {M**2K/W}
  0.9000000    ,   ! Thermal Absorptance
  0.7500000    ,   ! Solar Absorptance
  0.7500000    ;   ! Visible Absorptance
```

Material:Air

This material is used to describe the air gap in an opaque construction element. Glass elements use a different property (WindowGas) to describe the air between two glass layers.

Field: Name

This field is a unique reference name that the user assigns to a particular material. This name can then be referred to by other input data (ref: Construction).

Field: Thermal Resistance

This field is used to enter the thermal resistance (R-value) of the material layer. Units for this parameter are (m^2-K)/W. Thermal resistance must be greater than zero. Note that most R-values in the USA are calculated in Inch-Pound units and must be converted to the SI equivalent.

```
MATERIAL:AIR,
       \memo Air Space in Opaque Construction
  A1 , \field Name
       \type alpha
       \reference MaterialName
  N1 ; \field Thermal Resistance
       \units m2-K/W
       \type real
       \minimum> 0
```

And, an IDF example:

```
MATERIAL:Air,B1 - AIRSPACE RESISTANCE,  ! Material Name
  0.1603675    ;  ! Resistance {M**2K/W}
```

MaterialProperty:Moisture:MTF

This material is used to describe the four moisture material properties that are used in the MTF (Moisture Transfer Function) solution algorithm. There are some special cases that needed to be handled with the MTF implementation. Using a layer-by-layer solution affords the possibility of handling these special cases, which would not be possible with the building surface solution technique. These special cases are impermeable layers and nearly impermeable layers. To handle these cases special algorithms have been implemented for a given layer and construction:

1. All layers are MTF layers, cannot mix and match with CTF layers or resistive layers. Need to specify all the heat and moisture material properties.
2. All layers are CTF layers, cannot mix with MTF layers. These layers will need the full heat material properties and cannot use resistive layers. This is specified by leaving D_v, $\gamma(T)$, and $\beta(\rho_v)$ set to zero. This set of conditions will trigger the standard CTF only calculation, and will solve the building element layer-by-layer.
3. One or more of the layers are nearly impermeable. This is where mixing and matching permeable and nearly impermeable layers in the same building element is possible. This is specified by leaving $\gamma(T)$ and $\beta(\rho_v)$ set to zero. This set of conditions will trigger the full MTF simplification for the specified layer.

Case 1 will handle building constructions that have layers that are permeable and have moisture capacitance. These are specified in the input by supplying the all the conduction and moisture material properties for each material used in that building element. Case 2 will handle layers where there are nearly impermeable layers and there is no need for the MTF solution in that construction. This case is used when you have some surfaces that you would like to simulate the moisture with other surfaces that a sensible only solution will suffice. Most of the time, the standard CTF solution will be used in lieu of this special case. Case 3 will handle building constructions with a vapor barrier and/or a paint layer.

One of the interesting capabilities of the layer-by-layer solution technique is that each layer can be customized to make the wall more realistic. For example adding a vapor barrier made of polyethylene would effectively keep moisture from being transmitted from one side to the other, with essentially no moisture capacitance in the polyethylene material itself. Nevertheless, its inclusion in the building element does affect the moisture transfer and storage on adjacent layers. To model this with the simultaneous heat and mass balance equations (Full MTF) cause difficulties with the mass equation. The time to effectively transfer moisture through this material is so long that the numerical precision of the transfer function series to model this becomes inaccurate. To handle this type of layer, a CTF series handles the heat transfer and a permeance equation is specified to handle the vapor diffusion. This is done by setting the material properties used specifically for moisture capacitance to zero, and they are the ones used to specify the moisture isotherm. Therefore, if $\gamma(T)$ and $\beta(\rho_v)$ are set to zero this effectively eliminates the moisture capacitance in the layer and this simplifies the simulation to only handle permeance across the material layer.

This moisture model will be done when the appropriate MTF moisture materials are specified and the Solution Algorithm parameter is set to MTF.

Field: Name

This field is a unique reference name that the user assigns to a particular material. This name can then be referred to by other input data (ref: Construction).

Field: Vapor Diffusivity

This field is used to enter the vapor diffusivity of the material layer. Units for this parameter are (m^2/s). Vapor Diffusivity must be greater than zero.

Field: Porosity

This field is used to enter the porosity or the void fraction of the material layer. Units for this parameter are (m^3/m^3). Porosity must be greater than zero.

Field: Thermal-Gradient

This field is used to enter the thermal-gradient coefficient $\gamma(T)$ for moisture capacity based on water vapor density. Units for this parameter are (kg/kg-K). This value is curve fit for the linear portion of the Moisture Capacitance curve that is suitable for the simulation.

Field: Isothermal Moisture Capacity

This field is used to enter the Isothermal moisture capacity $\beta(\rho_V)$ based on the water vapor density of the material layer. Units for this parameter are (m^3/kg). This value is curve fit for the linear portion of the Moisture Capacitance curve that is suitable for the simulation.

```
MATERIALPROPERTY:MOISTURE:MTF,
  A1 , \field Name
       \type object-list
       \object-list MaterialName
       \memo Moisture Material Name that the moisture properties will be added to,
       \memo this the material name for the basic material properties.
  N1 , \field Vapor Diffusivity
       \note Used in MTF Moisture model
       \units m2/s
       \minimum 0.0
       \type real
  N2 , \field Porosity
       \note Used in MTF Moisture model
       \units m3/m3
       \minimum 0.0
       \type real
  N3,  \field Thermal-Gradient Coeff for Moisture Capacity
       \note Used in MTF Moisture model
       \units kg/kg-K
       \type real
  N4;  \field Isothermal moisture capacity
       \note Used in MTF Moisture model
       \units m3/kg
       \type real
```

And, an IDF example showing how it is used in conjunction with the Material:Regular in synchronous pairs:

```
MATERIAL:Regular,GYPSUM DRYWALL,  !- Material Name
 Rough,  !- Roughness
  2.5400000E-02,  !- Thickness {m}
  0.2620000    ,   !- Conductivity {w/m-K}
   725.0000    ,   !- Density {kg/m3}
   1085.000    ,   !- Specific Heat {J/kg-K}
  0.9000000    ,   !- Thermal Emittance
  0.7500000    ,   !- Solar Absorptance
  0.7500000    ;   !- Visible Absorptance
 MATERIALPROPERTY:MOISTURE:MTF,GYPSUM DRYWALL,
    5.263510E-06,   !- Vapor Diffusity {m2/s}
    7.000000E-01,   !- Porosity {m3/m3}
    8.794000E-04,   !- Thermal-Gradient Coeff {kg/kg-K}
        1.160200;   !- Isothermal moisture capacity {m3/kg}
```

MaterialProperty:Moisture:EMPD

This material is used to describe the five moisture material properties that are used in the EMPD (Effective Mean Penetration Depth) solution algorithm. The EMPD is a simplified, lumped moisture model that simulates moisture storage and release from material services. The model uses "actual" convective mass transfer coefficients that are determined by existing heat and mass transfer relationships, e.g. the Lewis relation. An effective moisture penetration depth may be determined from either experimental or detailed simulation data by using actual surface areas and moisture sorption isotherms.

This moisture model will be done when the appropriate EMPD moisture materials are specified and the Solution Algorithm parameter is set to EMPD

Field: Name

This field is a unique reference name that the user assigns to a particular material. This name can then be referred to by other input data (ref: Construction).

Field: EMPD Value

This field is used to enter the effective moisture penetration depth of the material layer. Units for this parameter are (m).

Field: Constants to Define Equilibrium Equation

The next four fields describe the sorption isotherm curve used for building materials. These four fields are dimensionless coefficients.

```
MATERIALPROPERTY:MOISTURE:EMPD,
  A1 , \field Name
       \type object-list
       \object-list MaterialName
       \memo Moisture Material Name that the moisture properties will be added to.
       \memo Additional material properties required to perform the EMPD model.
       \memo Effective Mean Penetration Depth (EMPD)
  N1 , \field EMPD value; This is the Penetration depth
       \note Used in EMPD Moisture model
       \units m
       \minimum 0.0
       \type real
  N2 , \field "a", coefficient to define equilibrium equation
       \note Used in EMPD Moisture model
       \units dimensionless
       \type real
  N3 , \field "b", coefficient to define equilibrium equation
       \note Used in EMPD Moisture model
       \units dimensionless
       \type real
  N4 , \field "c", coefficient to define equilibrium equation
       \note Used in EMPD Moisture model
       \units dimensionless
       \type real
  N5 ; \field "d", coefficient to define equilibrium equation
       \note Used in EMPD Moisture model
       \units dimensionless
       \type real
```

And, an IDF example showing how it is used in conjunction with the Material:Regular in synchronous pairs:

```
MATERIAL:Regular,GYPSUM DRYWALL,  !- Material Name
 Rough,  !- Roughness
  2.5400000E-02,  !- Thickness {m}
  0.2620000    ,   !- Conductivity {w/m-K}
   725.0000    ,   !- Density {kg/m3}
   1085.000    ,   !- Specific Heat {J/kg-K}
  0.9000000    ,   !- Thermal Emittance
  0.7500000    ,   !- Solar Absorptance
  0.7500000    ;   !- Visible Absorptance
MATERIALPROPERTY:MOISTURE:EMPD,GYPSUM DRYWALL,
  0.001            ! EMPD Value
  0.06246,         ! Constant to define equilibrium equation {dimensionless}
  4.516,           ! Constant to define equilibrium equation {dimensionless}
  0.07096,         ! Constant to define equilibrium equation {dimensionless}
  0.4883;          ! Constant to define equilibrium equation {dimensionless}
```

Materials for Glass Windows and Doors

The three following descriptions (WindowGlass, WindowGas, WindowShade) are used to describe glass windows and doors. The EnergyPlus window calculation does a separate heat balance on the glass layers to determine the glass face temperatures, one of which, the room side temperature of the inner pane, participates in the zone heat balance calculation. The property definitions described herein are supported by the National Fenestration Rating Council as standard.

“Front side” is the side of the glass opposite the zone in which the window is defined. “Back side” is the side closest to the zone in which the window is defined. Therefore, for exterior windows, “front side” is the side closest to the outdoors. For interior windows, “front side” is the side closest to the zone adjacent to the zone in which the window is defined.

The absorbed solar radiation in each pane is calculated and participates in the glass layer heat balance calculation. The visible transmittance and reflectance properties are used in the daylighting calculation.

Material:WindowGlass

In the following, for exterior windows, “front side” is the side of the glass closest to the outside air and “back side” is the side closest to the zone the window is defined in. For interzone windows, “front side” is the side closest to the zone adjacent to the zone the window is defined in and “back side” is the side closest to the zone the window is defined in.

Field: Name

The name of the glass layer. It corresponds to a layer in a window construction.

Field: Optical Data Type

If Optical Data Type = SpectralAverage, the values you enter for solar transmittance and reflectance are assumed to be averaged over the solar spectrum, and the values you enter for visible transmittance and reflectance are assumed to be averaged over the solar spectrum and weighted by the response of the human eye. There is an EnergyPlus Reference Data Set for Material:WindowGlass that contains spectral average properties for many different types of glass.

If Optical Data Type = Spectral, then, in the following field, you must enter the name of a spectral data set defined with the WindowGlassSpectralData object. In this case, the values of transmittance and reflectance in the fields below are not used.

Field: Name of Window Glass Spectral Data Set

If Optical Data Type = Spectral, this is the name of a spectral data set defined with a WindowGlassSpectralData object.

Field: Thickness

The surface-to-surface thickness of the glass (m).

Field: Solar Transmittance at Normal Incidence

Transmittance at normal incidence averaged over the solar spectrum. Used only when Optical Data Type = SpectralAverage.

For uncoated glass, when alternative optical properties are available—such as thickness, solar index of refraction, and solar extinction coefficient—they can be converted to equivalent solar transmittance and reflectance values using the equations given in “Conversion from Alternative Specification of Glass Optical Properties.”)

Field: Solar Reflectance at Normal Incidence: Front Side

Front-side reflectance at normal incidence averaged over the solar spectrum. Used only when Optical Data Type = SpectralAverage.

Field: Solar Reflectance at Normal Incidence: Back Side

Back-side reflectance at normal incidence averaged over the solar spectrum. Used only when Optical Data Type = SpectralAverage.

Field: Visible Transmittance at Normal Incidence

Transmittance at normal incidence averaged over the solar spectrum and weighted by the response of the human eye. Used only when Optical Data Type = SpectralAverage.

For uncoated glass, when alternative optical properties are available—such as thickness, visible index of refraction, and visible extinction coefficient—they can be converted to equivalent visible

transmittance and reflectance values using the equations given in “Conversion from Alternative Specification of Glass Optical Properties.”)

Field: Visible Reflectance at Normal Incidence: Front Side

Front-side reflectance at normal incidence averaged over the solar spectrum and weighted by the response of the human eye. Used only when Optical Data Type = SpectralAverage.

Field: Visible Reflectance at Normal Incidence: Back Side

Back-side reflectance at normal incidence averaged over the solar spectrum and weighted by the response of the human eye. Used only when Optical Data Type = SpectralAverage.

Field: IR Transmittance at Normal Incidence

Long-wave transmittance at normal incidence.

Field: IR Hemispherical Emissivity: Front Side

Front-side long-wave emissivity.

Field: IR Hemispherical Emissivity: Back Side

Back-side long-wave emissivity.

Field: Conductivity

Thermal conductivity (W/m-K).

```
MATERIAL:WINDOWGLASS,
  A1 , \field Name
       \type alpha
       \reference MaterialName
  A2 , \field Optical Data Type
       \type choice
       \key SpectralAverage
       \key Spectral
  A3 , \field Name of Window Glass Spectral Data Set
       \note Used only when Optical Data Type = Spectral
  N1 , \field Thickness
       \units m
       \type real
       \minimum> 0
  N2 , \field Solar Transmittance at Normal Incidence
       \note Used only when Optical Data Type = SpectralAverage
       \type real
       \minimum 0
       \maximum< 1
  N3 , \field Solar Reflectance at Normal Incidence: Front Side
       \note Used only when Optical Data Type = SpectralAverage
       \note Front Side is side closest to outside air
       \type real
       \minimum 0
       \maximum< 1
  N4 , \field Solar Reflectance at Normal Incidence: Back Side
       \note Used only when Optical Data Type = SpectralAverage
       \note Back Side is side closest to zone air
       \type real
       \minimum 0
       \maximum< 1
```

```
  N5 , \field Visible Transmittance at Normal Incidence
       \note Used only when Optical Data Type = SpectralAverage
       \type real
       \minimum 0
       \maximum< 1
  N6 , \field Visible Reflectance at Normal Incidence: Front Side
       \note Used only when Optical Data Type = SpectralAverage
       \type real
       \minimum 0
       \maximum< 1
  N7 , \field Visible Reflectance at Normal Incidence: Back Side
       \note Used only when Optical Data Type = SpectralAverage
       \type real
       \minimum 0
       \maximum< 1
  N8 , \field IR Transmittance at Normal Incidence
       \type real
       \default 0
       \maximum< 1
       \minimum 0
  N9 , \field IR Hemispherical Emissivity: Front Side
       \type real
       \maximum< 1
       \minimum> 0
  N10, \field IR Hemispherical Emissivity: Back Side
       \type real
       \maximum< 1
       \minimum> 0
  N11; \field Conductivity
       \units W/m-K
       \type real
       \minimum> 0
```

An IDF example:

```
MATERIAL:WINDOWGLASS, GLASS - CLEAR SHEET 1 / 8 IN,
  SpectralAverage, ! Optical data type
  0.003, ! Thickness {m} 1/8"
  0.850, ! Solar transmittance at normal incidence
  0.075, ! Solar reflectance at normal incidence: front side
  0.075, ! Solar reflectance at normal incidence: back side
  0.901, ! Visible transmittance at normal incidence
  0.081, ! Visible reflectance at normal incidence: front side
  0.081, ! Visible reflectance at normal incidence: back side
  0.0,   ! IR transmittance at normal incidence
  0.84,  ! IR hemispherical emissivity: front side
  0.84,  ! IR hemispherical emissivity: back side
  0.9;   ! Conductivity {W/m-K}
```

Conversion from Alternative Specification of Glass Optical Properties

In EnergyPlus, glass optical properties as a function of angle of incidence are determined from input values of glass thickness, d, transmittance at normal incidence, T, front reflectance at normal incidence, R_f, and back reflectance at normal incidence, R_b. However, for uncoated glass (where $R_f = R_b = R$), glass properties are often specified by an alternative sets of values, such as

thickness, d (m)
index of refraction, n
extinction coefficient, k (m^{-1})

or

index of refraction, n
transmittance at normal incidence, T

The following equations show how to convert from these alternative sets of values to the values required by EnergyPlus. These equations apply only to uncoated glass, and can be used to convert either spectral-average solar properties or spectral-average visible properties (in general, *n*, *k*, *T* and *R* are different for the solar and visible).

(1) Given *d*, *n* and *k*, find *T* and *R*:

$$\tau = e^{-kd}$$

$$r = \left(\frac{n-1}{n+1}\right)^2$$

$$R = r + \frac{(1-r)^2 r\tau^2}{1-r^2\tau^2}$$

$$T = \frac{(1-r)^2\tau}{1-r^2\tau^2}$$

Example:

d = 0.004 m
k = 30.0 m^{-1}
n = 1.526

$$r = \left(\frac{1.526-1}{1.526+1}\right)^2 = 0.04336$$

$$\tau = e^{-30.0(0.004)} = 0.88692$$

$$R = 0.07462$$

$$T = 0.81287$$

(2) Given *n* and *T*, find *R*:

$$r = \left(\frac{n-1}{n+1}\right)^2$$

$$\tau = \frac{\left[(1-r)^4 + 4r^2T^2\right]^{1/2} - (1-r)^2}{2r^2T}$$

$$R = r + \frac{(1-r)^2 r\tau^2}{1-r^2\tau^2}$$

Example:

T = 0.86156
n = 1.526

$$r = \left(\frac{1.526 - 1}{1.526 + 1} \right)^2$$
$$\tau = 0.93974$$
$$R = 0.07846$$

Material:WindowGas

This object specifies the properties of the gas between the panes of a multi-pane window. Gas Type = Custom allows you to specify the properties of gases other than air, argon, krypton, CO_2 and SF_6. There is an EnergyPlus Reference Data Set for Material:WindowGas that contains properties for several types of gas.

Field: Name

This field is the name of the gas fill. It refers to a layer in a window construction.

Field: Gas Type

This field is the type of gas. The choices are Air, Argon, Krypton, CO2, SF6 and Custom. If Gas Type = Custom you can use Density, etc. to specify the properties of a different type of gas or of a gas mixture.

Field: Thickness

The thickness (m) of the gas layer.

Field: Density

The gas density (kg/m^3) at 0°C. Used only if Gas Type = Custom.

Field: Density Temperature Derivative

The temperature derivative (kg/m^3-K)of the density at 0°C. Used only if Gas Type = Custom.

Field: Conductivity

The gas conductivity (W/m-K) at 0°C. Used only if Gas Type = Custom.

Field: Conductivity Temperature Derivative

The temperature derivative (W/m-K^2) of the conductivity at 0°C. Used only if Gas Type = Custom.

Field: Viscosity

The gas viscosity (kg/m-s) at 0°C. Used only if Gas Type = Custom.

Field: Viscosity Temperature Derivative

The temperature derivative (kg/m-s-K) of the viscosity at 0°C. Used only if Gas Type = Custom.

Field: Prandtl Number

The gas Prandtl number at 0°C. Used only if Gas Type = Custom.

Field: Prandtl Number Temperature Derivative

The temperature derivative (1/K) of the Prandtl number at 0°C. Used only if Gas Type = Custom.

```
MATERIAL:WINDOWGAS,
  A1 , \field Name
       \type alpha
       \reference MaterialName
  A2 , \field Gas Type
       \type choice
       \key Air
       \key Argon
       \key Krypton
       \key CO2
       \key SF6
       \key Custom
  N1 , \field Thickness
       \units m
       \type real
       \minimum> 0
  N2 , \field Density
       \units kg/m3
       \type real
       \note Used only if Gas Type = Custom
       \minimum> 0
  N3 , \field Density Temperature Derivative
       \units kg/m3-K
       \type real
       \note Used only if Gas Type = Custom
```

```
  N4 , \field Conductivity
       \units W/m-K
       \type real
       \note Used only if Gas Type = Custom
       \minimum> 0
  N5 , \field Conductivity Temperature Derivative
       \units W/m-K2
       \type real
       \note Used only if Gas Type = Custom
  N6 , \field Viscosity
       \units kg/m-s
       \type real
       \note Used only if Gas Type = Custom
       \minimum> 0
  N7 , \field Viscosity Temperature Derivative
       \units kg/m-s-K
       \type real
       \note Used only if Gas Type = Custom
  N8 , \field Prandtl Number
       \type real
       \note Used only if Gas Type = Custom
       \minimum> 0
  N9 ; \field Prandtl Number Temperature Derivative
       \units 1/K
       \type real
       \note Used only if Gas Type = Custom
```

An IDF example:

```
MATERIAL:WINDOWGAS,AIRGAP,
  AIR,      ! Gas type (Air - Argon - Krypton - Xenon - SF6 - Custom)]
  0.0125;   ! Thickness {m} 1/2 inch
```

Material:WindowShade

This object specifies the properties of window shade materials. Reflectance and emissivity properties are assumed to be the same on both sides of the shade. Shades are considered to be perfect diffusers (all transmitted and reflected radiation is hemispherically diffuse) with transmittance and reflectance independent of angle of incidence. There is an EnergyPlus

Reference Data Set for Material:WindowShade that contains properties of generic shading devices.

Field: Name

Name of the shade material. It is referenced as a layer in a window construction.

Field: Solar Transmittance

Transmittance averaged over the solar spectrum.

Field: Solar Reflectance

Reflectance averaged over the solar spectrum.

Field: Visible Transmittance

Transmittance averaged over the solar spectrum and weighted by the response of the human eye.

Field: Visible Reflectance

Reflectance averaged over the solar spectrum and weighted by the response of the human eye.

Field: Thermal hemispherical emissivity

Long-wave emissivity.

Field: Thermal Transmittance

Long-wave transmittance.

Field: Thickness

Surface-to-surface thickness (m). Used with Conductivity to calculate the conductance of insulating shades (Control Type = **ExteriorInsulatingShade** or **InteriorInsulatingShade** in the **WindowShadingControl** for windows using this shade).

Field: Conductivity

Shade conductivity. Used with Thickness to calculate the conductance of insulating shades (Control Type = **ExteriorInsulatingShade** or **InteriorInsulatingShade** in the **WindowShadingControl** for windows using this shade).

```
MATERIAL:WINDOWSHADE,
  A1 , \field Name
       \type alpha
       \reference MaterialName
  N1 , \field Solar transmittance
       \note Assumed independent of incidence angle
       \type real
       \minimum 0
       \maximum< 1
  N2 , \field Solar Reflectance
       \note Assumed same for both sides
       \note Assumed independent of incidence angle
       \type real
       \minimum 0
       \maximum< 1
  N3 , \field Visible transmittance
       \note Assumed independent of incidence angle
       \type real
       \minimum 0
       \maximum< 1
  N4 , \field Visible reflectance
       \note Assumed same for both sides
       \note Assumed independent of incidence angle
       \type real
       \minimum 0
       \maximum< 1
  N5 , \field Thermal hemispherical emissivity
       \type real
       \maximum< 1
       \minimum> 0
  N6 , \field Thermal transmittance
       \type real
       \maximum< 1
       \minimum 0
  N7 , \field Thickness
       \note Used only for insulating shade
       \units m
       \type real
  N8;  \field Conductivity
       \note Used only for insulating shade
       \units W/m-K
       \type real
       \minimum> 0
```

An IDF example:

```
MATERIAL:Shade,DRAPES - CLOSE WEAVE MEDIUM,
  0.05         ,   ! Solar Transmittance
  0.3000000    ,   ! Solar Reflectance
  0.05         ,   ! Visible Transmittance
  0.3000000    ,   ! Visible reflectance
  0.9000000    ;   ! Emissivity
```

WindowGlassSpectralData

With the WindowGlassSpectralData object, you can specify the wavelength-by-wavelength transmittance and reflectance properties of a glass material. To determine the overall optical properties of a glazing system (solar and visible transmittance and solar absorptance vs. angle of incidence) EnergyPlus first calculates transmittance and absorptance vs. angle of incidence for each wavelength. This is then weighted by a standard solar spectrum to get the solar transmittance and absorptance vs. angle of incidence (for use in the solar heat gain calculations), and further weighted by the response of the human eye to get the visible transmittance vs. angle of incidence (for use in the daylighting calculation).

WindowGlassSpectralData should be used for multi-pane windows when one or more of the glass layers is *spectrally selective*, i.e., the transmittance depends strongly on wavelength. An example is glass with a coating that gives high transmittance in the daylight part of the solar spectrum (roughly

0.4 to 0.7 microns) and low transmittance at longer wavelengths, thus providing better solar heat gain control than uncoated glass. If spectral data is not used in case, the overall optical properties of the glazing system that EnergyPlus calculates will not be correct.

You can input up to 450 sets of values for wavelengths covering the solar spectrum. Each set consists of

{wavelength (microns), transmittance, front reflectance, back reflectance}

Spectral data of this kind are routinely measured by glass manufacturers. Data sets for over 800 commercially available products are contained in an Optical Data Library maintained by the Windows Group at Lawrence Berkeley National Laboratory. This library can be downloaded from http://windows.lbl.gov.

Field: Name

The name of the spectral data set. It is referenced by Material:WindowGlass when Optical Data Type = Spectral.

Fields 1-4 (repeated up to 450 times)

Sets of values for wavelengths covering the solar spectrum (from about 0.25 to 2.5 microns [10^{-6} m]). Each set consists of

{wavelength (microns), transmittance, front reflectance, back reflectance}

The wavelength values must be in ascending order. The transmittance and reflectance values are at normal incidence. “Front reflectance” is the reflectance for radiation striking the glass from the outside, i.e., from the side opposite the zone in which the window is defined. “Back reflectance” is the reflectance for radiation striking the glass from the inside, i.e., from the zone in which the window is defined. Therefore, for exterior windows, “front” is the side closest to the outdoors and “back” is the side closest to the zone in which the window is defined. For interior windows, “front” is the side closest to the adjacent zone and “back” is the side closest to the zone in which the window is defined.

```
WindowGlassSpectralData,
       \memo Name is followed by up to 450 sets of normal-incidence measured values of
       \memo [wavelength, transmittance, front reflectance, back reflectance] for wavelengths
       \memo covering the solar spectrum (from about 0.25 to 2.5 microns)
  A1,  \field Name
  N1,N2,N3,N4,      N5,N6,N7,N8,     N9,N10,N11,N12,  N13,N14,N15,N16, N17,N18,N19,N20,
  N21,N22,N23,N24,  N25,N26,N27,N28, N29,N30,N31,N32, N33,N34,N35,N36, N37,N38,N39,N40,
  N41,N42,N43,N44,  N45,N46,N47,N48, N49,N50,N51,N52, N53,N54,N55,N56, N57,N58,N59,N60,
  N61,N62,N63,N64,  N65,N66,N67,N68, N69,N70,N71,N72, N73,N74,N75,N76, N77,N78,N79,N80,
  N81,N82,N83,N84,  N85,N86,N87,N88, N89,N90,N91,N92, N93,N94,N95,N96, N97,N98,N99,N100,
    .
    .
    .
  N1701,N1702,N1703,N1704, N1705,N1706,N1707,N1708, N1709,N1710,N1711,N1712,N1713,N1714,N1715,N1716,
  N1717,N1718,N1719,N1720, N1721,N1722,N1723,N1724, N1725,N1726,N1727,N1728, N1729,N1730,N1731,N1732,
  N1733,N1734,N1735,N1736, N1737,N1738,N1739,N1740, N1741,N1742,N1743,N1744, N1745,N1746,N1747,N1748,
  N1749,N1750,N1751,N1752, N1753,N1754,N1755,N1756, N1757,N1758,N1759,N1760, N1761,N1762,N1763,N1764,
  N1765,N1766,N1767,N1768, N1769,N1770,N1771,N1772, N1773,N1774,N1775,N1776, N1777,N1778,N1779,N1780,
  N1781,N1782,N1783,N1784, N1785,N1786,N1787,N1788, N1789,N1790,N1791,N1792, N1793,N1794,N1795,N1796,
  N1797,N1798,N1799,N1800;
```

An IDF example:

```
WindowGlassSpectralData,
      TestSpectralDataSet,
       ! { from WINDOW 4 library }
       ! { actual 9.91mm clear laminate: 15_mil PVB, ID:37966/50032-39-9 } 10.38
       ! { conductivity PVB adjusted, W/M/K  } 0.798
       ! { thermal IR transmittance, assumed } tir=0.00
       ! { thermal IR hemispherical emittance, assumed } emis= 0.84 0.84

       ! WL   T     Rfront Rback
       .300, 0.000, 0.045, 0.045,
       .310, 0.000, 0.044, 0.044,
       .320, 0.000, 0.044, 0.044,
       .330, 0.000, 0.042, 0.042,
       .340, 0.000, 0.041, 0.041,
       .350, 0.000, 0.040, 0.040,
       .360, 0.009, 0.040, 0.040,
       .370, 0.120, 0.040, 0.040,
       .380, 0.492, 0.051, 0.051,
       .390, 0.782, 0.070, 0.070,
       .400, 0.856, 0.075, 0.075,
       .410, 0.858, 0.075, 0.075,
       .420, 0.858, 0.075, 0.075,
       .430, 0.860, 0.075, 0.075,
       .440, 0.861, 0.075, 0.075,
       .450, 0.871, 0.075, 0.075,
       .460, 0.880, 0.076, 0.076,
       .470, 0.883, 0.075, 0.075,
       .480, 0.887, 0.076, 0.076,
       .490, 0.890, 0.075, 0.075,
       .500, 0.890, 0.075, 0.075,
       .510, 0.891, 0.075, 0.075,
       .520, 0.887, 0.075, 0.075,
       .530, 0.890, 0.075, 0.075,
       .540, 0.883, 0.074, 0.074,
       .550, 0.888, 0.074, 0.074,
       .560, 0.882, 0.074, 0.074,
       .570, 0.881, 0.074, 0.074,
       .580, 0.865, 0.071, 0.071,
       .590, 0.858, 0.070, 0.070,
```

```
     .600, 0.865, 0.070, 0.070,
     .610, 0.856, 0.070, 0.070,
     .620, 0.845, 0.070, 0.070,
     .630, 0.837, 0.070, 0.070,
     .640, 0.827, 0.069, 0.069,
     .650, 0.820, 0.067, 0.067,
     .660, 0.807, 0.067, 0.067,
     .670, 0.798, 0.065, 0.065,
     .680, 0.791, 0.065, 0.065,
     .690, 0.781, 0.065, 0.065,
     .700, 0.768, 0.064, 0.064,
     .710, 0.761, 0.064, 0.064,
     .720, 0.744, 0.062, 0.062,
     .730, 0.713, 0.064, 0.064,
     .740, 0.703, 0.062, 0.062,
     .750, 0.694, 0.061, 0.061,
     .760, 0.685, 0.061, 0.061,
     .770, 0.675, 0.060, 0.060,
     .780, 0.667, 0.060, 0.060,
     .790, 0.655, 0.060, 0.060,
     .800, 0.646, 0.059, 0.059,
     .810, 0.638, 0.059, 0.059,
     .820, 0.629, 0.057, 0.057,
     .830, 0.623, 0.057, 0.057,
     .840, 0.614, 0.056, 0.056,
     .850, 0.608, 0.056, 0.056,
     .860, 0.601, 0.055, 0.055,
     .870, 0.597, 0.054, 0.054,
     .880, 0.592, 0.054, 0.054,
     .890, 0.587, 0.054, 0.054,
     .900, 0.582, 0.055, 0.055,
     .950, 0.568, 0.051, 0.051,
    1.000, 0.562, 0.051, 0.051,
    1.050, 0.556, 0.050, 0.050,
    1.100, 0.563, 0.051, 0.051,
    1.150, 0.556, 0.050, 0.050,
    1.200, 0.547, 0.050, 0.050,
    1.250, 0.577, 0.051, 0.051,
    1.300, 0.598, 0.054, 0.054,
    1.350, 0.608, 0.055, 0.055,
    1.400, 0.603, 0.052, 0.052,
    1.450, 0.614, 0.055, 0.055,
    1.500, 0.648, 0.057, 0.057,
    1.550, 0.680, 0.059, 0.059,
    1.600, 0.699, 0.060, 0.060,
    1.650, 0.706, 0.060, 0.060,
    1.700, 0.570, 0.051, 0.051,
    1.750, 0.585, 0.051, 0.051,
    1.800, 0.637, 0.055, 0.055,
    1.850, 0.655, 0.057, 0.057,
    1.900, 0.637, 0.057, 0.057,
    1.950, 0.634, 0.057, 0.057,
    2.000, 0.634, 0.057, 0.057,
    2.050, 0.586, 0.052, 0.052,
    2.100, 0.588, 0.054, 0.054,
    2.150, 0.597, 0.054, 0.054,
    2.200, 0.576, 0.051, 0.051,
    2.250, 0.404, 0.045, 0.045,
    2.300, 0.179, 0.037, 0.037,
    2.350, 0.219, 0.037, 0.037,
    2.400, 0.240, 0.039, 0.039,
    2.450, 0.200, 0.040, 0.040,
    2.500, 0.214, 0.039, 0.039;
```

Construction

For walls, roofs, floors, windows, and doors, constructions are “built” from the included materials. Each layer of the construction is a material name listed in order from “outside” to “inside”. Up to ten

(one of the few limitations in EnergyPlus!) layers may be specified. "Outside" is the layer furthest away from the zone air (not necessarily the outside environment). "Inside" is the layer next to the Zone air. In FLOOR38 below, for example, the outside layer is the acoustic tile below the floor, the next layer is the air space above the tile, and the inside layer is the concrete floor deck.

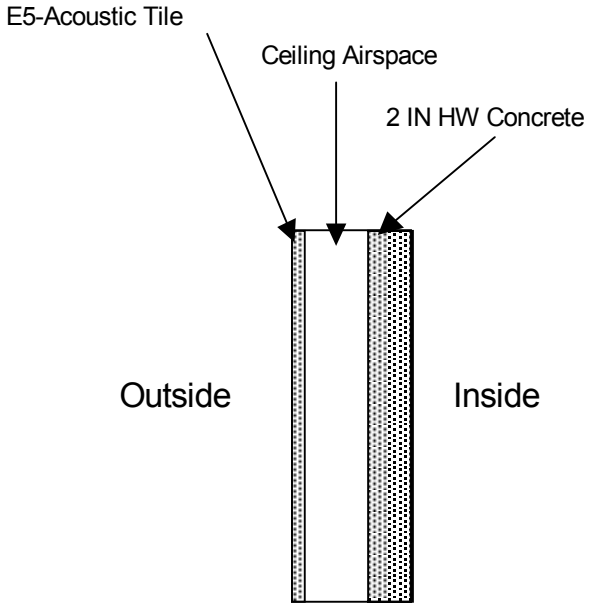

Figure 3. Floor 38 illustration

Window constructions are similarly built up from Material:WindowGlass, Material:WindowGas and Material:WindowShade layers (see illustration - Figure 4. Illustration for material ordering in Windows). The gap between the inside glass layer (layer #3) and the shade layer is not entered. A maximum of four glass layers and one shade layer is allowed. If there is a shade layer, it must be the first or last layer (no between-pane window shades!). A gas layer must always separate adjacent glass layers in a multi-pane glazing.

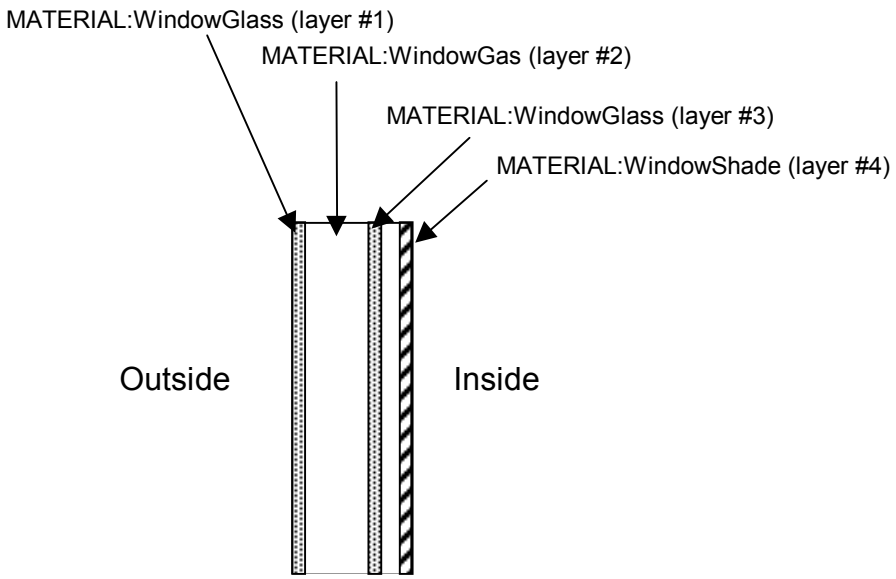

Figure 4. Illustration for material ordering in Windows

Outside and inside air film resistances are never given as part of a wall, roof, floor, window, or door definition since they are calculated during the EnergyPlus simulation. Note also that constructions are assumed to be one-dimensional.

Field: Name

This field is a user specified name that will be used as a reference by other input syntax. For example, a heat transfer surface (ref: Surface:HeatTransfer) requires a construction name to define what the make-up of the wall is. This name must be identical to one of the CONSTRUCTION definitions in the input data file.

Field: Outside Layer

Each construction must have at least one layer. This field defines the material name associated with the layer on the outside of this construction—outside referring to the side that is not exposed to the zone but rather the opposite side environment, whether this is the outdoor environment or another zone. Material layers are defined based on their thermal properties elsewhere in the input file (ref: Material:Regular, Material: Regular-R, Material:WindowGlass, Material:WindowGas, Material:WindowShade). As noted above, the outside layer should NOT be a film coefficient since EnergyPlus will calculate convection and radiation heat transfer more precisely.

Field(s) 2-10: Layers

The next fields are optional and the number of them showing up in a particular CONSTRUCTION definition depends solely on the number of material layers present in that particular construction. The data expected is identical to the outside layer field (see previous field description). The order of the remaining layers is important and should be listed in order of occurrence from the one just inside the outside layer until the inside layer is reached. As noted above, the inside layer should NOT be a film coefficient since EnergyPlus will calculate convection and radiation heat transfer more precisely.

```
CONSTRUCTION,
       \memo Start with outside layer and work your way to the Inside Layer
       \memo Up to 10 layers total, 8 for windows
       \memo Put in the ascii material name for each layer
  A1 , \field Name
       \type alpha
       \reference ConstructionNames
  A2 , \field Outside Layer
       \type object-list
       \object-list MaterialName
  A3 , \field Layer #2
       \type object-list
       \object-list MaterialName
  A4 , \field Layer #3
       \type object-list
       \object-list MaterialName
  A5 , \field Layer #4
       \type object-list
       \object-list MaterialName
  A6 , \field Layer #5
       \type object-list
       \object-list MaterialName
  A7 , \field Layer #6
       \type object-list
       \object-list MaterialName
  A8 , \field Layer #7
       \type object-list
       \object-list MaterialName
  A9 , \field Layer #8
       \type object-list
       \object-list MaterialName
  A10, \field Layer #9
       \type object-list
       \object-list MaterialName
  A11; \field Layer #10
       \type object-list
       \object-list MaterialName
```

IDF Example (floor construction):

```
CONSTRUCTION, FLOOR38,  ! Material layer names follow:
      E5 - ACOUSTIC TILE,
      E4 - CEILING AIRSPACE,
      C12 - 2 IN HW CONCRETE;
```

IDF Example (window construction, no shade):

```
CONSTRUCTION, DOUBLE PANE WINDOW,  !- Material layer names follow:
      GLASS - CLEAR SHEET 1 / 8 IN,
      WinAirB1 - AIRSPACE RESISTANCE,
      GLASS - CLEAR SHEET 1 / 8 IN;
```

IDF Example (window construction, with interior shade):

```
CONSTRUCTION, DOUBLE PANE WITH BLINDS,  !- Material layer names follow:
      GLASS - CLEAR SHEET 1 / 8 IN,
      WinAirB1 - AIRSPACE RESISTANCE,
      GLASS - CLEAR SHEET 1 / 8 IN,
      VENETIAN BLINDS - LIGHT;
```

Construction With Internal Source

In some cases such as radiant systems, a construction will actually have resistance wires or hydronic tubing embedded within the construction. Heat is then either added or removed from this building element to provide heating or cooling to the zone in question. It is possible to enter such constructions into EnergyPlus with the CONSTRUCTION WITH INTERNAL SOURCE syntax described below. The definition is similar to the CONSTRUCTION definition with a few additions related to radiant systems.

Field: Name

This field is a user specified name that will be used as a reference by other input syntax. For example, a heat transfer surface (ref: Surface:HeatTransfer) requires a construction name to define what the make-up of the wall is. This name must be identical to one of the CONSTRUCTION definitions in the input data file.

Field: Source Interface

This field is an integer that relates the location of the heat source or sink. The integer refers to the list of material layers that follow later in the syntax and determines the layer after which the source is present. If a source is embedded within a single homogenous layer (such as concrete), that layer should be split into two layers and the source added between them. For example, a value of "2" in this field tells EnergyPlus that the source is located between the second and third material layers listed later in the construction description (see layer fields below).

Field: User-defined Temperature Calculation Interface

The nature of this field is similar to the source interface parameter (see previous field) in that it is an integer, refers to the list of material layers that follow, and defines a location after the layer number identified by the user-defined number. In this case, the user is specifying the location for a separate temperature calculation rather than the location of the heat source/sink. This feature is intended to allow users to calculate a temperature within the construction. This might be important in a radiant cooling system where condensation could be a problem. This temperature calculation can assist users in making that determination in absence of a full heat and mass balance calculation.

Field: Solution Dimensions

This field is also an integer and refers to the detail level of the calculation. A value of "1" states that the user is only interested in a one-dimensional calculation. This is appropriate for electric resistance heating and for hydronic heating (when boiler/hot water heater performance is not affected by return and supply water temperatures). A value of "2" will trigger a two-dimensional solution for this surface only. This may be necessary for hydronic radiant cooling situations since chiller performance is affected by the water temperatures provided.

A few things should be noted about requesting two-dimensional solutions. First, the calculation of the conduction transfer functions is fairly intensive and will require a significant amount of computing time. Second, the solution regime is two-dimensional internally but it has a one-dimensional boundary condition imposed at the inside and outside surface (i.e., surface temperatures are still isothermal is if the surface was one-dimensional).

Field: Tube Spacing

This field defines how far apart in meters the hydronic tubing or electrical resistance wires are spaced in the direction perpendicular to the main direction of heat transfer. Note that this parameter is only used for two-dimensional solutions (see previous field).

Field: Outside Layer

Each construction must have at least one layer. This field defines the material name associated with the layer on the outside of this construction—outside referring to the side that is not exposed to the zone but rather the opposite side environment, whether this is the outdoor environment or another zone. Material layers are defined based on their thermal properties elsewhere in the input file (ref: Material:Regular, Material: Regular-R, Material:WindowGlass, Material:WindowGas, Material:WindowShade). As noted above, the outside layer should NOT be a film coefficient since EnergyPlus will calculate convection and radiation heat transfer more precisely.

Field(s) 2-10: Layers

The next fields are optional and the number of them showing up in a particular CONSTRUCTION definition depends solely on the number of material layers present in that particular construction. The data expected is identical to the outside layer field (see previous field description). The order of the remaining layers is important and should be listed in order of occurrence from the one just inside the outside layer until the inside layer is reached. As noted above, the inside layer should NOT be a film coefficient since EnergyPlus will calculate convection and radiation heat transfer more precisely.

```
CONSTRUCTION WITH INTERNAL SOURCE,
       \memo Start with outside layer and work your way to the Inside Layer
       \memo Up to 10 layers total, 8 for windows
       \memo Put in the ascii material name for each layer
  A1 , \field Name
       \type alpha
       \reference ConstructionNames
  N1 , \field Source present after layer N1
       \type integer
       \memo refers to the list of materials which follows
  N2 , \field Temperature calculation requested after layer N2
       \type integer
       \memo refers to the list of materials which follows
  N3 , \field Dimensions for the CTF calculation
       \type integer
       \minimum 1
       \maximum 2
       \memo 1 = 1-dimensional calculation, 2 = 2-dimensional calculation
  N4 , \field Tube Spacing
       \type real
       \units m
       \memo uniform spacing between tubes or resistance wires in direction
       \memo perpendicular to main intended direction of heat transfer
  A2 , \field Outside Layer
       \type object-list
       \object-list MaterialName
  A3 , \field Layer #2
       \type object-list
       \object-list MaterialName
  A4 , \field Layer #3
       \type object-list
       \object-list MaterialName
  A5 , \field Layer #4
       \type object-list
       \object-list MaterialName
  A6 , \field Layer #5
       \type object-list
       \object-list MaterialName
  A7 , \field Layer #6
       \type object-list
       \object-list MaterialName
  A8 , \field Layer #7
       \type object-list
       \object-list MaterialName
  A9 , \field Layer #8
       \type object-list
       \object-list MaterialName
  A10, \field Layer #9
       \type object-list
       \object-list MaterialName
  A11; \field Layer #10
       \type object-list
       \object-list MaterialName
```

Construction Element Outputs

A "canned" report gives calculational elements for the materials and constructions used in the input. One report is specific to opaque constructions (note that nominal thermal conductance is calculated):

```
! <Construction>,Construction Name,#Layers,#CTFs,ThermalConductance {w/m2-
K},OuterThermalAbsorptance,InnerThermalAbsorptance,OuterSolarAbsorptance,InnerSolarAbsorptance,Roughness
! <Material>,Material Name,Thickness {m},Conductivity {w/m-K},Density {kg/m3},Specific Heat {J/kg-
K},ThermalResistance {m2-K/w}
! <Material:Air>,Material Name,ThermalResistance {m2-K/w}
! <CTF>,Time,Outside,Cross,Inside,Flux (except final one)
 Construction,EXTWALL09,   4,  10,   2.545,   0.900,   0.900,   0.930,   0.920,Rough
 Material,A2 - 4 IN DENSE FACE BRICK,  0.1015,  1.245,   2082.400,      920.480,  0.000
 Material:Air,B1 - AIRSPACE RESISTANCE,  1.604E-01
 Material,C3 - 4 IN HW CONCRETE BLOCK,  0.1015,   0.813,  977.126,  836.800,  0.000
 Material,E1 - 3 / 4 IN PLASTER OR GYP BOARD,  0.0191,  0.726,  1601.846,  836.800,  0.000
 CTF,  10,      0.10715199E-11,      0.44186691E-14,      0.14346150E-10,     -0.10248104E-14
 CTF,   9,     -0.25186333E-08,      0.15780964E-10,     -0.16497893E-07,      0.29032834E-11
 CTF,   8,      0.17896149E-05,      0.12937587E-07,      0.71388551E-05,     -0.29832094E-08
 CTF,   7,     -0.43786616E-03,      0.27068116E-05,     -0.11493690E-02,      0.10608763E-05
 CTF,   6,      0.34400314E-01,      0.15476134E-03,      0.65011894E-01,     -0.14014705E-03
 CTF,   5,     -0.97406050    ,      0.25450990E-02,      -1.4316276    ,      0.59346493E-02
 CTF,   4,       10.768438    ,      0.12350128E-01,       12.921113    ,     -0.98751105E-01
 CTF,   3,      -51.384585    ,      0.17132510E-01,      -53.283790    ,      0.64089692
 CTF,   2,       113.21125    ,      0.58201488E-02,       105.67206    ,      -1.8334096
 CTF,   1,      -113.52163    ,      0.29700690E-03,      -98.064185    ,       2.2704167
 CTF,   0,       41.904930    ,      0.95262372E-06,       34.160867
```

A separate report is available for windows (note that both nominal conductance and Solar Heat Gain Coefficient are calculated for windows):

```
! <WindowConstruction>,Construction Name,#Layers,Roughness,Conductance {w/m2-
K},SHGC,SolarTransmittanceNormalIncid,VisibleTransmittanceNormalIncid,DiffuseSolarTransmittance,DiffuseVis
ibleTransmittance,DiffuseFrontSolarReflectance,DiffuseBackSolarReflectance,DiffuseFrontVisibleReflectance,
DiffuseBackVisibleReflectance
! <Material:WindowGlass>,Material Name,Thickness {m},Conductivity {w/m-
K},SolarTransmittance,VisibleTransmittance,ThermalFrontAbsorptance,ThermalBackAbsorptance,SolarFrontReflec
tance,SolarBackReflectance,VisibleFrontReflectance,VisibleBackReflectance
! <Material:WindowGas>,Material Name,GasType,Thickness {m},Conductivity {w/m-K},Density {kg/m3},Viscosity
{kg/ms},Prandtl
! <Material:WindowShade>,Material Name,Thickness {m},Conductivity {w/m-
K},ThermalAbsorptance,Transmittance,VisibleTransmittance,ShadeReflectance
 Construction,ELECTRO-CON-LIGHT,   3,VerySmooth,   2.657,   0.704,   0.576,   0.746,   0.479,   0.640,
0.208,   0.178,   0.241,   0.238
 Material:WindowGlass,ELECTRO GLASS LIGHT STATE,  0.006,  0.900,  0.814,  0.847,  0.840,  0.840,  0.086,
0.086,  0.099,  0.099
 Material:WindowGas,WINAIRGAP,Air,  1.300E-02,  2.410E-02,  1.290E+00,  1.730E-05,  7.200E-01
 Material:WindowGlass,SPECTRAL GLASS INNER PANE,  0.010,  0.798,  0.000,  0.000,  0.840,  0.840,  0.000,
0.000,  0.000,  0.000
 Construction,ELECTRO-CON-DARK,   3,VerySmooth,   2.657,   0.187,   0.079,   0.113,   0.062,   0.083,
0.214,   0.210,   0.129,   0.214
 Material:WindowGlass,ELECTRO GLASS DARK STATE,  0.006,  0.900,  0.111,  0.128,  0.840,  0.840,  0.179,
0.179,  0.081,  0.081
 Material:WindowGas,WINAIRGAP,Air,  1.300E-02,  2.410E-02,  1.290E+00,  1.730E-05,  7.200E-01
 Material:WindowGlass,SPECTRAL GLASS INNER PANE,  0.010,  0.798,  0.000,  0.000,  0.840,  0.840,  0.000,
0.000,  0.000,  0.000
```

Group – Thermal Zone Description/Geometry

Without thermal zones and surfaces, the building can't be simulated. This group of objects (Zone, Surface) describes the thermal zone characteristics as well as the details of each surface to be modeled. Included here are shading surfaces.

Zone

This element sets up the parameters to simulate each thermal zone of the building.

Field: North Axis

The Zone North Axis is specified **relative to the Building North Axis**. This value is specified in degrees (clockwise is positive). For more information, see the figure below as well as the description under "SurfaceGeometry".

Field(s): Origin (X,Y,Z)

The X,Y,Z coordinates of a zone origin can be specified, for convenience in vertice entry. Depending on the values in "SurfaceGeometry" (see description later in this section), these will be used to completely specify the building coordinates in "world coordinate" or not. Zone Origin coordinates are specified **relative to the Building Origin (which always 0,0,0)**. The following figure illustrates the use of Zone North Axis as well as Zone Origin values.

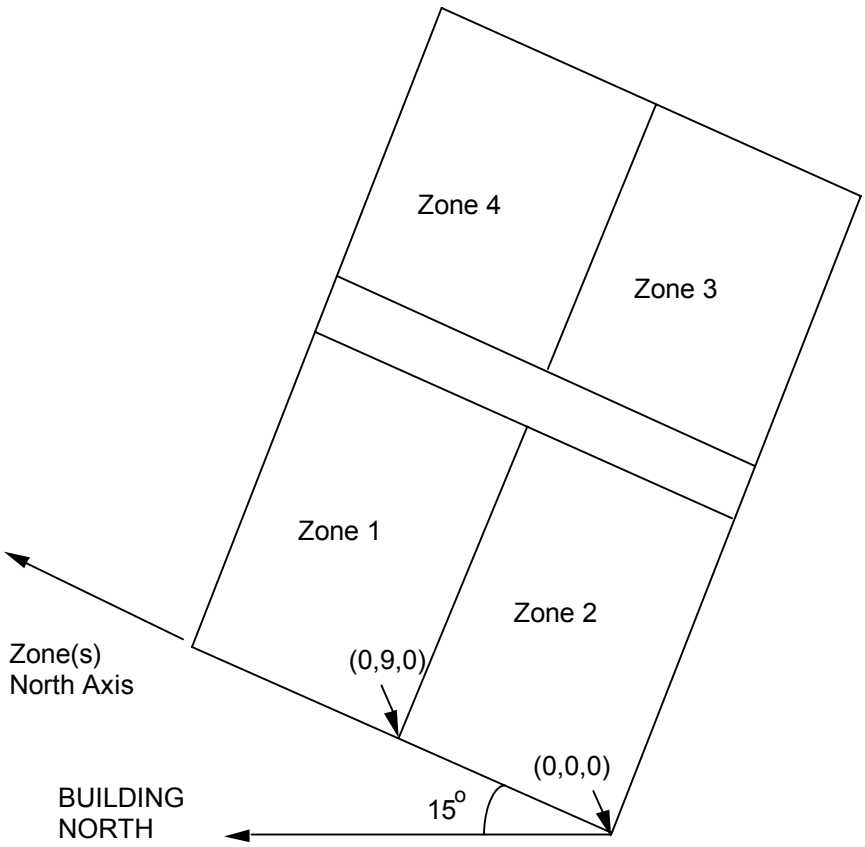

Figure 5. Illustration of Zone North Axis and Origins

Field: Type

Zone type is currently unused.

Field: Multiplier

Zone Multiplier is designed as a "multiplier" for zone loads but is currently not implemented.

Field: Ceiling Height

I don't know if Ceiling Height is implemented or not.

Field: Volume

I don't know if Volume is implemented or not.

```
ZONE,
  A1 , \field Zone Name
       \type alpha
       \reference ZoneNames
  N1 , \field Relative North (to building)
       \units deg
       \type real
  N2 , \field X Origin
       \units m
       \type real
  N3 , \field Y Origin
       \units m
       \type real
  N4 , \field Z Origin
       \units m
       \type real
  N5 , \field Type
       \type integer
       \maximum 1
       \minimum 1
       \default 1
  N6 , \field Multiplier
       \type real
  N7 , \field Ceiling Height
       \units m
       \type real
  N8 ; \field Volume
       \units m3
       \type real
```

And, an IDF example:

```
ZONE, DORM ROOMS AND COMMON AREAS,   ! Zone Name
  0.0000000E+00,   ! Zone North Axis (relative to Building)
  0.0000000E+00,   ! Zone X Origin {m}
   6.096000    ,   ! Zone Y Origin {m}
  0.0000000E+00,   ! Zone Z Origin {m}
           1,   ! Zone Type
           1,   ! Zone Multiplier
  -100.0000    ,   ! Zone Ceiling Height {m}
  0.0000000E+00;   ! Zone Volume {m**3}
```

Surface(s)

What's a building without surfaces?

EnergyPlus allows for several surface types: (Surface:HeatTransfer, Surface:HeatTransfer:Sub, Surface:HeatTransfer:InternalMass, Surface:Shading:Detached, Surface:Shading:Attached). Before these surfaces are explained in detail, however, a description of geometric parameters used in EnergyPlus will be given. Since the input of surface vertices is common to most of the surface types, it will also be given a separate discussion.

SurfaceGeometry

Some flexibility is allowed in specifying surface vertices. This flexibility is embodied in the SurfaceGeometry class/object in the input file. Note that the parameters specified in this statement are used for all surface vertice inputs – there is no further "flexibility" allowed.

In order to perform shadowing calculations, the building surfaces must be specified. EnergyPlus uses a three dimensional (3D) Cartesian coordinate system for surface vertex specification. This Right Hand coordinate system has the X-axis pointing east, the Y-axis pointing north, and the Z-axis pointing up. See figure below.

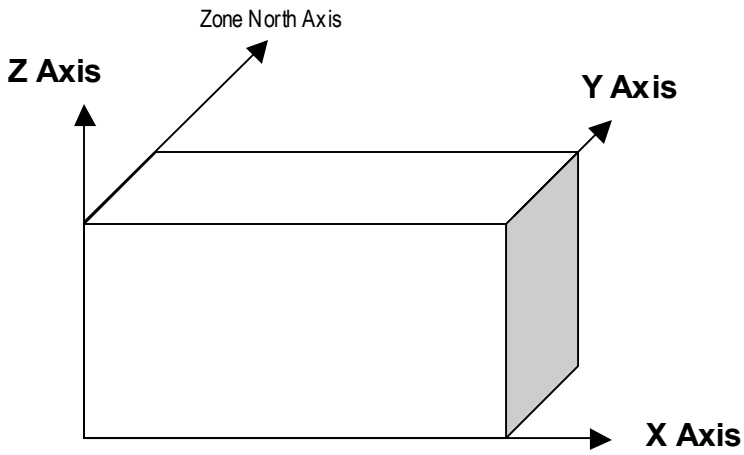

Figure 6. EnergyPlus Coordinate System

```
SurfaceGeometry, \note type of vertices being used, entry details
  A1, \field SurfaceStartingPosition
      \note Specified as entry for a 4 sided surface/rectangle
      \note Surfaces are specified as viewed from "outside" the surface
      \note Shading surfaces ...
      \type choice
      \key ULC - Upper Left Corner
      \key UpperLeftCorner
      \key LLC - Lower Left Corner
      \key LowerLeftCorner
      \key URC - Upper Right Corner
      \key UpperRightCorner
      \key LRC - Lower Right Corner
      \key LowerRightCorner
  A2, \field VertexEntry
      \type choice
      \key CCW - Counter Clock Wise
      \key CounterClockWise
      \key CW  - Clock Wise
      \key ClockWise
  A3; \field SurfaceGeometryKey
      \type choice
      \key relative -- coordinates are entered relative to zone origin
      \key WCS -- "world coordinate system" -- all coordinates entered are "absolute" for this facility
      \key WorldCoordinateSystem
```

Field: SurfaceStartingPosition

The shadowing algorithms in EnergyPlus rely on surfaces having vertices in a certain order and positional structure. Thus, the surface translator needs to know the starting point for each surface entry. Since most surfaces will be 4 sided, the convention will specify this position as though each surface were 4 sided. Extrapolate 3 sided figures to this convention. In the future, 5 and more sided figures will be allowed; again, the most reasonable option for this should be used (or will be changed when 5 and more sided figures are allowed).

Field: VertexEntry

Surfaces are always specified as being viewed from the outside of the zone to which they belong. (Shading surfaces are specified slightly differently and are discussed under the particular types).

EnergyPlus needs to know whether the surfaces are being specified in counterclockwise or clockwise order (from the SurfaceStartingPosition). EnergyPlus uses this to determine the outward facing normal for the surface (which is the *facing angle* of the surface – very important in shading and shadowing calculations.

Field: SurfaceGeometryKey

Vertices can be specified in two ways: using "Absolute", "World" coordinates, or a **relative** coordinate specification. Relative coordinates allow flexibility of rapid change to observe changes in building results due to orientation and position. "World" coordinates will facilitate use within a CADD system structure.

Relative coordinates make use of both Building and Zone North Axis values as well as Zone Origin values to locate the surface in 3D coordinate space. **World** coordinates do not use these values.

Typically, all zone origin values for "World" coordinates will be (0,0,0) but Building and Zone North Axis values may be used in certain instances (namely the Daylighting Coordinate Location entries).

Surface Vertices

Each of the following surfaces -- Surface:HeatTransfer, Surface:HeatTransfer:Sub, Surface:Shading:Detached, and Surface:Shading:Attached -- uses the same vertex input. The numeric parameters indicated below are taken from the Surface:HeatTransfer definition; the others may not be exactly the same but are identical in configuration. In addition, these are by intention the last fields listed for each object class. This will enable EnergyPlus to incorporate 5 and more sided surface inputs later on.

```
N2 , \field Number of Surface Vertices -- Number of (X,Y,Z) groups in this surface
     \note currently limited 3 or 4, later?
     \minimum 3
     \maximum 4
     \memo vertices are given in SurfaceGeometry coordinates -- if relative, all surface coordinates
     \memo are "relative" to the Zone Origin.  if WCS, then building and zone origins are used
     \memo for some internal calculations, but all coordinates are given in an "absolute" system.
N3,  \field Vertex 1 X-coordinate
     \units m
     \type real
N4 , \field Vertex 1 Y-coordinate
     \units m
     \type real
N5 , \field Vertex 1 Z-coordinate
     \units m
     \type real
< repeated for Vertex 2 through 4>, same order as above
```

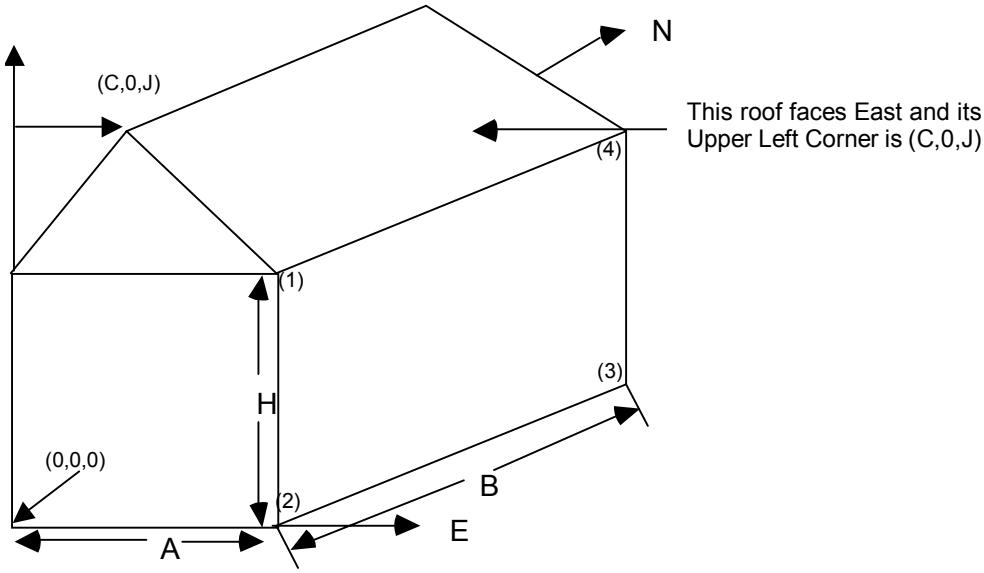

Figure 7. Illustration for Surface Vertices

The figure above will help illustrate Surface Vertice entry. Following the convention used in "SurfaceGeometry", the surfaces for this single zone are:

4,0,0,H, 0,0,0, A,0,0, A,0,H; ! (4 vertices, South Wall)

4,A,0,H,A,0,0,A,B,0,A,B,H; ! (4 vertices, East Wall)

ignore other walls that are not shown in this figure

4,C,0,J,A,0,H,A,B,H,C,B,J; (4 vertices, roof)

3,C,0,J,0,0,H,A,0,H; (3 vertices, gable end)

Note that point 1 of the entry is the Upper Left Corner of the rectangular surfaces and the point of the triangle for the 3 sided surface. The east wall shows the order of vertex entry.

Surface:HeatTransfer

The heat transfer surface is necessary for all calculations. There must be at least one heat transfer surface per zone. The IDD definition, up to the number of surface sides, is shown below:

```
Surface:HeatTransfer, \note used for base surfaces of all types
  A1 , \field User Supplied Surface Name
       \type alpha
       \reference SurfaceNames
  A2 , \field Surface Type
       \type choice
       \key FLOOR
       \key WALL
       \key CEILING
       \key ROOF
  A3 , \field Construction Name of the Surface
       \note To be matched with a construction in this input file
       \type object-list
       \object-list ConstructionNames
  A4 , \field InsideFaceEnvironment
       \note Zone the surface is a part of
       \type object-list
       \object-list ZoneNames
  A5 , \field OutsideFaceEnvironment
       \type choice
       \key OtherZone
       \key ExteriorEnvironment
       \key Ground
       \key OtherSideCoeff
  A6,  \field OutsideFaceEnvironment Object
       \type object-list
       \object-list ZoneNames
       \object-list OSCNames
       \note Used only if OutsideFaceEnvironment is OtherZone or OtherSideCoeff
       \note If OtherZone, specify name of corresponding surface in adjacent zone
       \note If OtherSideCoeff, specify name of OtherSideCoefficients
  A7 , \field Sun Exposure
       \type choice
       \key SunExposed
       \key NoSun
  A8, \field Wind Exposure
       \type choice
       \key WindExposed
       \key NoWind
  N1, \field View Factor to Ground
       \type real
       \note From the exterior of the surface
  N2 , \field Number of Surface Vertices -- Number of (X,Y,Z) groups in this surface
```

Field: User supplied surface name

This is a unique character string associated with each heat transfer surface. It is used in several other places as a reference (e.g. as the base surface name for a Window or Door).

Field: Surface Type

Used primarily for convenience, the surface type can be one of the choices illustrated above – Wall, Floor, Ceiling, Roof.

Field: Construction Name of Surface

This is the name of the construction (ref: CONSTRUCTION) used in the surface.

Field: Inside Face Environment

This is the zone name to which the surface belongs.

Field: Outside Face Environment

This value can be one of several things depending on the actual kind of surface.

1) OtherZone – if this surface is an internal surface, then this is the choice. The heat balance between two zones can be accurately simulated by making this an "interzone" surface. EnergyPlus will simulate a group of zones simultaneously and will include the heat transfer between zones. The interzone heat transfer is accomplished by specifying the surface's outside environment as the opposing zone. However, as this increases the complexity of the calculations, it is not necessary to specify the other zone unless the two zones will have a significant temperature difference. If the two zones will not be very different (temperature wise), then the surface uses its own zone as the outside environment. In either case, the zone name on the "outside" of this surface is placed in the next field.
2) ExteriorEnvironment – if this surface is exposed to outside temperature conditions, then this is the choice. See Sun Exposure and Wind Exposure below for further specifications on this kind of surface.
3) Ground – if this surface is exposed to the ground, then this is the choice. The temperature on the outside of this surface will be the Ground Temperature.
4) OtherSideCoeff – if this surface has a custom, user specified temperature or other parameters (See OtherSideCoefficient specification), then this is the choice. The outside face environment will be the name of the OtherSideCoefficient specification.

Field: Outside Face Environment Object

As stated above, if the Outside Face Environment is "OtherZone", then this field's value must be the surface name that is in the zone that shares this surface. If the opposing zone has the same temperature characteristics of this zone, then this field can be the same as the surface name for this surface (i.e. User Specified Surface Name). Note that the construction for this opposing surface must match both the nominal U value for the current surface as well as the facing direction (which is calculated by EnergyPlus from the surface vertices).

Equally, if the Outside Face Environment, is "OtherSideCoeff", then this field's value must be the OtherSideCoefficient name.

If neither of the above conditions is the case, then this field should be left blank.

Field: Sun Exposure

If the surface is exposed to the sun, then "SunExposed" should be entered in this field. Otherwise, "NoSun" should be entered.

Note, a cantilevered floor could have "ExteriorEnvironment" but "NoSun" exposure.

Field: Wind Exposure

If the surface is exposed to the Wind, then "WindExposed" should be entered in this field. Otherwise, "NoWind" should be entered.

Field: View Factor to Ground

The view factor to ground is part of the function that EnergyPlus uses to calculate how much diffuse solar radiation to place on an outside wall. The view factor to ground is the fraction of the ground plane, assumed horizontal, that is visible from a surface. It is used to calculate the diffuse solar radiation and long-wave radiation from the ground that is incident on the surface. The View Factor to Sky is calculated within EnergyPlus for each appropriate surface, based on the surface tilt.

For example, if there are no obstructions, a vertical surface (tilt = 90 deg) sees half of the ground plane and so VIEW TO GROUND = 0.5. A horizontal downward-facing surface sees the entire ground plane, so VIEW TO GROUND = 1.0. A horizontal upward-facing surface (horizontal roof) does not see the ground at all, so VIEW TO GROUND = 0.0.

The user is responsible for entering the View Factor to Ground for each surface. Typical values are obtained by the simple equation:

F(ViewGround) = (1-cos(SurfTilt))/2

Thus, for a wall of tilt 90° is 0.5. If the tilt of the wall changes, then the view factor to ground must also change.

Field: Number of Surface Vertice Groups

This field specifies the number of sides in the surface (number of X,Y,Z vertex groups). For further information, see the discussion on "Surface Vertices" above.

An IDF example of three walls (first is an exterior wall, second and third are interzone partitions):

```
Surface:HeatTransfer,Zn001:Wall001,  !- Base Surface Name
  Wall,EXTERIOR,  !- Class and Construction Name
  ZONE 1 @ 200 601 0 T,  !- Zone
  ExteriorEnvironment,,  !- Exterior Conditions and Target (if applicable)
   SunExposed,  !- Solar Exposure
   WindExposed,  !- Wind Exposure
  0.5000000    ,  !- VF to Ground
           4, !-Rectangle
  0.0000000E+00,  0.0000000E+00,   3.048000    ,
  0.0000000E+00,  0.0000000E+00,  0.0000000E+00,
   6.096000    ,  0.0000000E+00,  0.0000000E+00,
   6.096000    ,  0.0000000E+00,   3.048000    ;
Surface:HeatTransfer,Zn001:Wall006,  !- Base Surface Name
  Wall,INTERIOR,  !- Class and Construction Name
  HEARTLAND AREA,  !- Zone
  OtherZone,Zn004:Wall005,  !- Exterior Conditions and Target (if applicable)
   NoSun,  !- Solar Exposure
   NoWind,  !- Wind Exposure
  0.5000000    ,  !- VF to Ground
           4, !-Rectangle
   38.01000    ,   28.25000    ,   10.00000    ,
   38.01000    ,   28.25000    ,  0.0000000E+00,
   38.01000    ,   18.25000    ,  0.0000000E+00,
   38.01000    ,   18.25000    ,   10.00000    ;
 Surface:HeatTransfer,Zn001:Wall007,  !- Base Surface Name
  Wall,INTERIOR,  !- Class and Construction Name
  HEARTLAND AREA,  !- Zone
  OtherZone,Zn003:Wall006,  !- Exterior Conditions and Target (if applicable)
   NoSun,  !- Solar Exposure
   NoWind,  !- Wind Exposure
  0.5000000    ,  !- VF to Ground
           4, !-Rectangle
   58.01000    ,   18.25000    ,   10.00000    ,
   58.01000    ,   18.25000    ,  0.0000000E+00,
   58.01000    ,   28.25000    ,  0.0000000E+00,
   58.01000    ,   28.25000    ,   10.00000    ;
```

Surface:HeatTransfer:Sub

This surface class is used for "subsurfaces," which can be of three different types: Windows, Doors and GlassDoors. Note that a subsurface of a surface inherits several of the properties (such as Outside Face Environment, Sun Exposure, etc.) of its corresponding base surface.

```
Surface:HeatTransfer:Sub,
       \memo Used for windows, doors
  A1 , \field User Supplied Surface Name
       \note we never reference these names by other objects
       \type alpha
  A2 , \field Surface Type
       \type choice
       \key WINDOW
       \key DOOR
       \key GLASSDOOR
  A3 , \field Construction Name of the Surface
       \note To be matched with a construction in this input file
       \type object-list
       \object-list ConstructionNames
  A4 , \field Base Surface Name
       \type object-list
       \object-list SurfaceNames
  A5,  \field OutsideFaceEnvironment Object
       \type object-list
       \object-list SurfaceNames
       \object-list OSCNames
       \note Used only if Base OutsideFaceEnvironment is OtherZone or OtherSideCoeff
       \note If OtherZone, specify name of corresponding subsurface in adjacent zone or
       \note specify current subsurface name for internal partition separating like zones
       \note If OtherSideCoeff, specify name of OtherSideCoefficients or
       \note leave blank to inherit Base Surface's OtherSide Coefficients
  N1, \field View Factor to Ground
       \type real
       \note From the exterior of the surface
       \minimum 0
       \maximum 1
  A6, \field Name of shading control (windows only)
  A7, \field WindowFrameAndDivider Name
       \type object-list
       \object-list WindowFrameAndDividerNames
       \note Used only for exterior windows
       \note If not specified (blank), window has no frame or divider
  N2 , \field Multiplier
       \note Used only for Surface Type = WINDOW
       \note Non-integer values will be truncated to integer
       \default 1.0
       \minimum 1.0
  N3 , \field Number of Surface Vertice Groups -- Number of (X,Y,Z) groups in this surface
       \note currently limited 3 or 4, later?
       \minimum 3
       \maximum 4
       \note vertices are given in SurfaceGeometry coordinates -- if relative, all surface coordinates
       \note are "relative" to the Zone Origin.  if WCS, then building and zone origins are used
       \note for some internal calculations, but all coordinates are given in an "absolute" system.
  N4,  \field Vertex 1 X-coordinate
       \units m
       \type real
  N5 , \field Vertex 1 Y-coordinate
       \units m
       \type real
  N6 , \field Vertex 1 Z-coordinate
       \units m
       \type real
  N7,  \field Vertex 2 X-coordinate
       \units m
       \type real
  N8,  \field Vertex 2 Y-coordinate
       \units m
       \type real
  N9,  \field Vertex 2 Z-coordinate
       \units m
       \type real
  N10,  \field Vertex 3 X-coordinate
       \units m
       \type real
```

```
N11, \field Vertex 3 Y-coordinate
     \units m
     \type real
N12, \field Vertex 3 Z-coordinate
     \units m
     \type real
N13, \field Vertex 4 X-coordinate
     \units m
     \type real
N14, \field Vertex 4 Y-coordinate
     \type real
     \units m
N15; \field Vertex 4 Z-coordinate
     \units m
     \type real
```

Field: User Supplied Surface Name

This is a unique character string associated with each heat transfer subsurface. It may be used in other places as a reference (e.g. as the opposing subsurface of an interzone window or door).

Field: Surface Type

The choices for Surface Type are Window, Door and GlassDoor. Doors are assumed to be opaque (do not transmit solar radiation). Windows and GlassDoors transmit solar radiation. Windows and Glass Doors are treated identically in the calculation of heat transfer, solar gain, daylighting, etc., except that Windows can have multipliers but GlassDoors (and Doors) cannot. Windows and GlassDoors, but not Doors, can have movable interior or exterior shading devices, and can have frames and/or dividers. In the following "Window" applies to both Window and GlassDoor.

Field: Construction Name of Surface

This is the name of the construction (ref: CONSTRUCTION) used in the surface. Note that a Window can only use Material:WindowGlass, Material:WindowGas and Material:WindowShade in the materials of its construction.

Field: Base Surface Name

This is the name of the Surface:HeatTransfer that contains this subsurface. Certain kinds of surfaces may not be allowed to have subsurfaces. For example, a surface in contact with the ground (Outside Face Environment = Ground) cannot contain a window.

Field: Outside Face Environment Object

If the base surface has OtherZone or OtherSideCoeff as its Outside Face Environment, then this field must also be specified for the subsurface. Otherwise, it can be left blank.

If OutsideFaceEnvironment for the base surface is OtherZone, this field should specify the subsurface in the opposing zone that is the counterpart to this subsurface. The constructions of the subsurface and opposing subsurface must match, except that, for multi-layer constructions, the layer order of the opposing subsurface's construction must be the reverse of that of the subsurface.

If OutsideFaceEnvironment for the base surface is OtherSideCoeff, this field could specify the set of Other Side Coefficients for this subsurface. If this is left blank, then the Other Side Coefficients of the base surface will be used for this subsurface. *Windows are not allowed to have Other Side Coefficients.*

Field: View Factor to Ground

Same description as for the heat transfer base surfaces.

Field: Name of Shading Control

This field, if not blank, is the name of the window shading control. It is used for Type = Window and GlassDoor, but not for Type = Door. See WindowShadingControl, below.

Field: Window Frame and Divider Name

This field, if not blank, can be used to specify window frame and divider descriptions (see WindowFrameAndDivider). It is used only for exterior Windows and GlassDoors, i.e., those with OutsideFaceEnvironment = ExteriorEnvironment.

Field: Multiplier

Used only for Type = Window. It is the number of identical windows on a base surface. Using Multiplier can save input effort and calculation time. In the EnergyPlus calculation, the window glazing area (and area of frame and divider, if present) is multiplied by Multiplier. The calculation of shadowing on the window (and the calculation of the interior distribution of beam solar radiation transmitted by the window) are done for the specified window position and dimensions.

Multiplier should be used with caution. Multiplier > 1 can give inaccurate or nonsensical results in situations where the results are sensitive to window position; this includes shadowing on the window, daylighting from the window, and interior distribution of solar radiation from the window. In these cases, the results for the single input window, after multiplication, may not be representative of the results you would get if you entered each of the multiple windows separately.

If Multiplier > 1, you will get

--a *warning* if Solar Distribution = 0 (FullExterior) or 1 (FullInteriorAndExterior) in your Building input, indicating that the shadowing on the input window or the interior solar radiation distribution from the input window may not be representative of the actual group of windows. No warning is issued if Solar Distribution = -1 (MinimalShadowing).

--an *error* if the window is an exterior window in a zone that has a detailed daylighting calculation (Total Daylighting Reference Points > 0 in the Daylighting input for the zone). Since a single window with a multiplier can never give the same daylight illuminance as the actual set of windows, you are not allowed to use Multiplier in this situation.

Field: Number of Surface Vertices Groups

This field specifies the number of sides in the surface (number of X,Y,Z vertex groups). For further information, see the discussion on “Surface Vertices” above. Note that currently all subsurfaces are rectangular and therefore have four vertices.

Fields: Subsurface Vertex Coordinates

This is a total of twelve fields giving the x,y,z coordinate values of the four vertices of the rectangular subsurface [m].

An IDF example of a subsurface (Window):

```
Surface:HeatTransfer:Sub,Zn001:Wall001:Win001,  !- SubSurface Name
  Window,SINGLE PANE HW WINDOW,  !- Class and Construction Name
  Zn001:Wall001,,         !- Base Surface Name and Target (if applicable)
  0.5000000    ,          !- VF to Ground
  WINDOW-CONTROL-DRAPES,  !- Window Shading Control
  TestFrameAndDivider,    !- Frame/Divider name
  5,                      !- Multiplier
  4,                      !- Rectangle (number of sides)
   1.524000    ,  0.1520000    ,   2.743000    ,
   1.524000    ,  0.1520000    ,  0.3050000    ,
   4.572000    ,  0.1520000    ,  0.3050000    ,
   4.572000    ,  0.1520000    ,   2.743000    ;
```

Window Heat Transfer Output Variables

Window Shading Status []

A number that specifies the status of a window shading device in a particular time step. Allowed values are:

-1: The window has no shading device.

0: The window has a shading device but the shade is off; or the window has switchable glazing and the glazing is in the light state.

1: An interior non-insulating shade is on.

2: For switchable glazing (e.g., electrochromic), the window is in the dark state.

3: An exterior non-insulating shade is on.

4: An interior insulating shade is on.

5: An exterior insulating shade is on.

Window Transmitted Solar [W]

The total exterior beam and diffuse solar radiation transmitted through the glazing (and shade, if present) of an exterior window.

Zone Transmitted Solar [W]

The total exterior beam and diffuse solar radiation transmitted through the glazing (and shade, if present) of all exterior windows in a zone.

Window Solar Absorbed: All Glass Layers [W]

The total exterior beam and diffuse solar radiation absorbed in all of the glass layers of a window.

Incident Solar Output Variables

Surface Ext Solar Incident [W/m2]

The sum of direct plus diffuse solar radiation incident on the outside of an exterior surface.

Surface Ext Sunlit Area [m2]

The outside area of an exterior surface that is illuminated by direct solar radiation.

Surface Ext Sunlit Fraction []

The fraction of the outside area of an exterior surfrace that is illuminated by direct solar radiation. Equals “Surface Ext Sunlit Area” divided by total surface area.

Surface:HeatTransfer:InternalMass

Any surface that would logically be described as an interior wall, floor or ceiling can just as easily be described as Internal Mass. Internal Mass surface types only exchange energy with the zone in which they are described; they do not see any other zones. There are two approaches to using internal mass. The first approach is to have several pieces of internal mass with each piece having a different construction type. The other approach is to choose an average construction type and combine all of the interior surfaces into a single internal mass. Note that furniture and other large objects within a zone can be described using internal mass. However, simplifying calculations using internal mass must be used with caution when the "FullExteriorandInterior" Solar Distribution model (see BUILDING parameters) is chosen.

Example

When zoning an office building, five west-facing offices have been combined into one zone. All of the offices have interior walls made of the same materials. As shown in the figure below, this zone may be described with 5 exterior walls and 11 internal walls or 1 exterior wall and 1 internal mass. Note that fewer surfaces will speed up the EnergyPlus calculations.

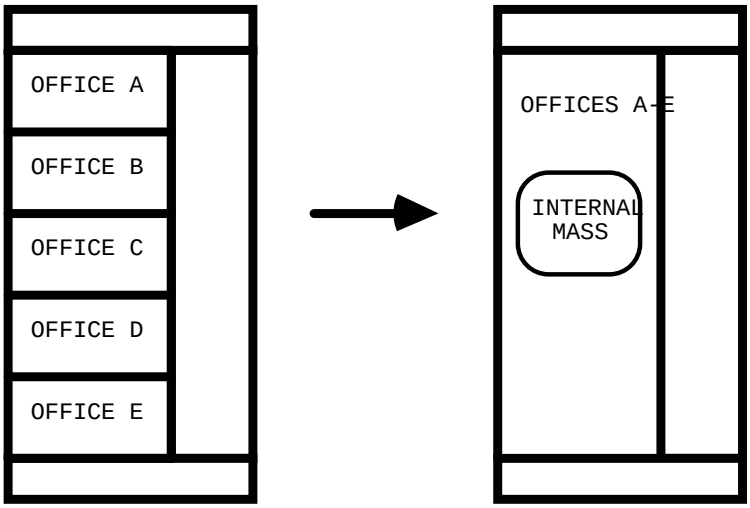

Figure 8. Representing 11 internal walls as internal mass

Example

A five-story building has the same ceiling/floor construction separating each of the levels. Zones that are on floors 2 through 4 may be described using a single piece of internal mass to represent both the floor and ceiling. The construction for this internal mass would be identical to the ceiling/floor construction that would be used to describe separate surfaces.

```
Surface:HeatTransfer:InternalMass,
       \memo Used to describe internal zone surface area that does not need to be part of geometric
representation.
       \memo This should be the total surface area exposed to the zone air.
  A1 , \field User Supplied Surface Name
       \type alpha
       \reference SurfaceNames
  A2 , \field Construction Name of the Surface
       \note To be matched with a construction in this input file
       \type object-list
       \object-list ConstructionNames
  A3 , \field Interior Environment
       \note Zone the surface is a part of
       \type object-list
       \object-list ZoneNames
  N1 ; \field Surface area
       \units m2
```

Field: User Supplied Surface Name

This is a unique character string associated with the internal mass surface. Though it must be unique from other surface names, it is used primarily for convenience with internal mass surfaces.

Field: Construction Name of Surface

This is the name of the construction (ref: CONSTRUCTION) used in the surface.

Field: Interior Environment

This is the name of the zone in which the internal mass is represented.

Field: Surface Area

This field is the surface area of the internal mass. The area that is specified must be the entire surface area that is exposed to the zone. If both sides of a wall are completely within the same zone, then the area of both sides must be included when describing that internal wall.

IDF examples of Internal Mass surfaces:

```
Surface:HeatTransfer:InternalMass,Zn002:IntM001,  !- Surface Name
  INTERIOR,  !- Construction Name
  DORM ROOMS AND COMMON AREAS,  !- Zone
   408.7734    ;  !- Total area exposed to Zone {m2}
 Surface:HeatTransfer:InternalMass,Zn002:IntM002,  !- Surface Name
  PARTITION02,  !- Construction Name
  DORM ROOMS AND COMMON AREAS,  !- Zone
   371.6122    ;  !- Total area exposed to Zone {m2}
```

Surface:Shading:Detached

Detached shading surfaces are used to describe items external to the building being simulated. Shading algorithms within EnergyPlus will account for building surfaces that shade themselves so you only need describe elements that aren't part of the building's geometry.

A detached shading device casts a shadow <u>only in the hemisphere toward which it faces.</u> This hemisphere is pointed to by the shading surface's outward normal vector, which is the cross product V23 x V21, where V23 is the vector from vertex 2 to vertex 3 and V21 is the vector from vertex 2 to vertex 1.

While "detached" implies that shading surfaces are not part of the building, the detached shading sequence can be used to describe attached shading surfaces which may shade more than one zone. For example, one wing of a building might shade several zones of another wing. Detached shading surfaces cast sun shadows only when the sun is behind them; therefore, a wall described as a detached shading surface will not shade itself. For this reason, detached objects which cast

shadows in an arc of more than 180 degrees when viewed from above should be described as several detached shading surfaces with different vertices.

Detached shading surfaces will also automatically shade diffuse solar radiation from the sky (and long-wave radiation from the sky). However, they will not shade diffuse radiation from the ground unless you enter a reduced value for View Factor to Ground for those building surfaces that are shaded.

Note that currently all shading surfaces are assumed to have zero reflectance so they do not reflect direct or diffuse solar back onto to the building—they only block this radiation.

```
Surface:Shading:Detached,
       \memo used for shading elements such as trees, other buildings, parts of this building that are not
being simulated.
  A1 , \field User Supplied Surface Name
       \type alpha
  A2,  \field TransSchedShadowSurf
       \note Transmittance schedule for the shading device
       \type object-list
       \object-list ScheduleNames
  N1 , \field Number of Surface Vertice Groups -- Number of (X,Y,Z) groups in this surface
```

Field: User Supplied Surface Name

This is a unique character string associated with the detached shading surface. Though it must be unique from other surface names, it is used primarily for convenience with detached shading surfaces.

Field: TransSchedShadowSurf

This field supplies the "schedule" of transmittance for the shading surface. The final value should be a fractional transmittance (from 0.0 to 1.0) for the surface. The default value, if a blank is entered in this field, is 0.0 – opaque. This scheduling can be used to allow for seasonal shading values such as deciduous trees. Though unlikely, transmittance based on times of day can also be used. Note that shading devices only shade during hours when the sun is up – this is automatically done by EnergyPlus. The user need only account for transmittance of the shading device.

Field: Number of Surface Vertice Groups

This field specifies the number of sides in the surface (number of X,Y,Z vertex groups). For further information, see the discussion on "Surface Vertices" above.

IDF example of Detached Shading Surfaces:

```
Surface:Shading:Detached,EAST SIDE TREE,  !- Detached Shading
   ShadingTransmittance:0002,  !- Shadowing Transmittance & Schedule
            3, !-Triangle
   33.52800    ,   10.66800    ,   10.05800    ,
   33.52800    ,   13.71600    ,  0.9140000    ,
   33.52800    ,   4.572000    ,  0.9140000    ;
 Surface:Shading:Detached,WEST SIDE TREE,  !- Detached Shading
   ShadingTransmittance:0002,  !- Shadowing Transmittance & Schedule
            3, !-Triangle
  -3.048000    ,   7.620000    ,   10.05800    ,
  -3.048000    ,   4.572000    ,  0.9140000    ,
  -3.048000    ,   13.71600    ,  0.9140000    ;
```

Surface:Shading:Attached

This class is used to describe attached "subsurfaces" which project outward from a surface and shade only the surface (and its subsurfaces) to which they are attached. These attached subsurfaces are commonly called overhangs, wings or fins. Thus, if a wall has an overhang, the overhang can only cast shadows onto the wall to which it is attached and onto doors and windows in that wall. Again, the sun casts a shadow when it is behind the attached shading device.

One zone surface can cast a shadow(s) on another zone surface(s). However, users need not worry about the effects of one wall shading another (e.g., an L-shaped zone). EnergyPlus will automatically check for possible shadowing and perform the proper calculations. In addition, since surfaces can only cast shadows in the hemisphere towards which they face, a roof or ceiling which faces *upward* will not cast a shadow *downward*. (Thus, specifying an oversized roof in an attempt to account for the shading effects of overhangs will *not* work). Interior surfaces do not cast shadows of any kind.

These attached shading devices currently only shade in one direction. Therefore, when a device exists (a fin) somewhere between the two ends of a surface, the user must specify two attached shading devices so that shading can take place both to the left and right of the wing.

When an attached shading device is specified, it will *only* cast shadows on its base surface and other subsurfaces of that base surface. Therefore, if this device, in fact, will cast a shadow on more than one surface, a similar device must be specified for each surface that will receive the shading, or the device should be described as Surface:Shading:Detached surface.

```
Surface:Shading:Attached,
       \memo used For fins, overhangs, elements that shade the building, are attached to the building
       \memo but are not part of the heat transfer calculations
  A1 , \field User Supplied Surface Name
       \type alpha
  A2 , \field Base Surface Name
       \type object-list
       \object-list SurfaceNames
  A3,  \field TransSchedShadowSurf
       \note Transmittance schedule for the shading device
       \type object-list
       \object-list ScheduleNames
  N2 , \field Number of Surface Vertice Groups -- Number of (X,Y,Z) groups in this surface
```

Field: User Supplied Surface Name

This is a unique character string associated with the attached shading surface. Though it must be unique from other surface names, it is used primarily for convenience with attached shading surfaces.

Field: Base Surface Name

This is the Surface name of the surface on which this shading surface resides (wall but not window, door).

Field: TransSchedShadowSurf

This field supplies the “schedule” of transmittance for the shading surface. The final value should be a fractional transmittance (from 0.0 to 1.0) for the surface. The default value, if a blank is entered in this field, is 0.0 – opaque. This scheduling can be used to allow for a seasonal change of transmittance in the device. Though unlikely, transmittance based on times of day can also be used. Note that shading devices only shade during hours when the sun is up – this is automatically done by EnergyPlus. The user need only account for transmittance of the shading device.

Field: Number of Surface Vertice Groups

This field specifies the number of sides in the surface (number of X,Y,Z vertex groups). For further information, see the discussion on “Surface Vertices” above. The example below will illustrate the correct input for an overhang (to shade the appropriate portion of the surface and window).

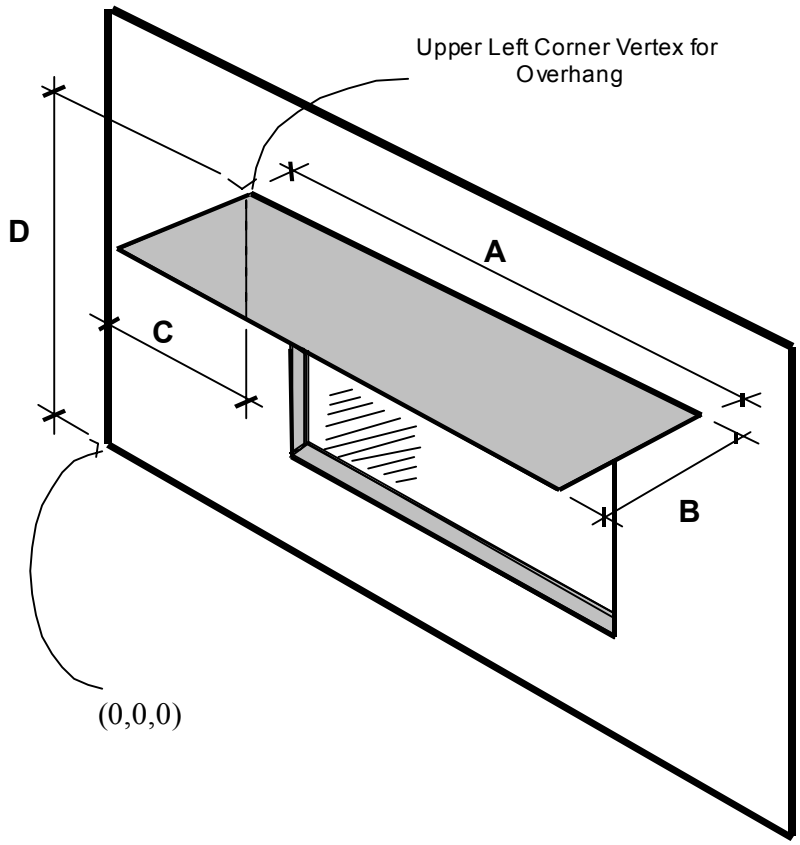

Figure 9. Illustration for Attached Shading Surface

Proper specification for this overhang is:

4,(C,0,D),(C,-B,D),(C+A,-B,D),(C+A,0,D); ( ) used to illustrate each vertex.

IDF example of attached shading surfaces (overhang, fin):

```
Surface:Shading:Attached,Zn001:Wall001:Shade001,  !- Surface Name
  Zn001:Wall001,  !- Base Surface Name
   ShadingTransmittance:0001,  !- Shadowing Transmittance & Schedule
           4, !-RectangularOverhang
   1.524000    , -0.3050000    ,   2.865000    ,
   1.524000    ,  0.0000000E+00,   2.865000    ,
   4.572000    ,  0.0000000E+00,   2.865000    ,
   4.572000    , -0.3050000    ,   2.865000    ;
Surface:Shading:Attached,Zn003:Wall001:Shade001,  !- Surface Name
  Zn003:Wall001,  !- Base Surface Name
   ShadingTransmittance:0001,  !- Shadowing Transmittance & Schedule
           4, !-RectangularLeftFin
   57.97000    ,   8.450000    ,   10.00000    ,
   57.97000    ,   8.450000    ,  0.0000000E+00,
   57.97000    ,   6.450000    ,  0.0000000E+00,
   57.97000    ,   6.450000    ,   10.00000    ;
 Surface:Shading:Attached,Zn003:Wall001:Shade002,  !- Surface Name
  Zn003:Wall001,  !- Base Surface Name
   ShadingTransmittance:0003,  !- Shadowing Transmittance & Schedule
           4, !-RectangularRightFin
   77.97000    ,   6.450000    ,   10.00000    ,
   77.97000    ,   6.450000    ,  0.0000000E+00,
   77.97000    ,   8.450000    ,  0.0000000E+00,
   77.97000    ,   8.450000    ,   10.00000    ;
```

WindowShadingControl

A window can have a movable shade. With WindowShadingControl (referenced by Surface:HeatTransfer:Sub with Type = Window or GlassDoor) you specify the location of the shade (interior or exterior), whether the shade affects conduction through the window (insulating or non-insulating), what variable or combination of variables triggers deployment of the shade, and what the trigger set point is. You also give the name of the window construction that has the layer-by-layer description of the window with the shade in place. The properties of the shade, such as transmittance and reflectance, are given by the shade material referenced in that construction (see Construction and Material:WindowShade).

Note: if a window has a shade, two constructions must be defined for the window, one without the shade and one with the shade. The construction without the shade is referenced in the Surface:HeatTransfer:Sub input for the window (see IDF example, below). The construction with the shade is referenced by the window's WindowShadingControl. For Control Type = ExteriorNonInsulatingShade, ExteriorInsulatingShade, InteriorNonInsulatingShade and InteriorInsulatingShade these two constructions must be identical expect for the presence of the shade layer in the shaded construction, otherwise you will get an error message. You will also get an error message if the window has no shade control (i.e., has no corresponding WindowShadeControl) but its construction has a shade layer.

Some Triggers involve two variables. The first group of these involves schedules; the form is ScheduleAndSomething — for example, ScheduleAndSolarOnWindow, ScheduleAndHorizontalSolar, etc. In this case, the shade is deployed if (1) the schedule value is 1 *and* (2) Something exceeds the Setpoint. For example, to trigger the shade only in the summer when the incident solar is big enough, use Trigger = ScheduleAndSolarOnWindow with a schedule that is 1 during the summer months and 0 otherwise.

The second group of two-variable Triggers involves daylight glare. They are used only on windows in zones with daylighting. The form is GlareOrSomething—for example, GlareOrSolarOnWindow, GlareOrHorizontalSolar, etc. In this case the shade will be deployed if (1) so doing reduces the daylight glare from the window *or* (2) Something exceeds the Setpoint.

A special type of WindowShadingControl is *SwitchableGlazing*. An example is electrochromic glazing in which the transmittance and reflectance of the glass is controlled electronically. For example, you could have electrochromic glazing switch from clear (high transmittance) to dark (low

transmittance) to control solar gain. If you choose the Control Type = SwitchableGlazing option for WindowShadingControl, the unswitched (clear) state is specified by the Construction referenced by the window and the switched (dark) state is specified by the Construction referenced by WindowShadingControl for that window. For example, if you specify Control Type = SwitchableGlazing and Trigger = ZoneAirTemp, then the glazing will switch to the dark state whenever the zone air temperature (in the previous time step) exceeds the Setpoint.

For Control Type = SwitchableGlazing the state of the window is either clear (unswitched) or dark (fully switched) for all triggers except DaylightIlluminance. In this case, the transmittance of the glazing is adjusted to just meet the daylight illuminance set point at the first daylighting reference point (see DAYLIGHTING). This type of control assures that there is just enough solar gain to meet the daylighting requirements in a zone, and no more, thus reducing the cooling load.

Field: User Supplied Shading Control Name

Name of the window shading control. It is referenced by a window or glass door. See “Name of Shading Control” under Surface:HeatTransfer:Sub.

Field: Control Type

The type of shading device. The choices are:

ExteriorNonInsulatingShade: Shade is on the outside of the window and has no insulating effect. Shade is assumed to be separated from the outside glass layer.

ExteriorInsulatingShade: Shade is on the outside of the window and has an insulating effect. Shade is assumed to be in contact with outside glass layer.

InteriorNonInsulatingShade: Shade is on the inside of the window and has no insulating effect. Shade is separated from the inside glass layer.

InteriorInsulatingShade: Shade is on the inside of the window and has an insulating effect. Shade is assumed to be in contact with the inside glass layer.

SwitchableGlazing: Shading is achieved by changing the characteristics of the window glass, such as by darkening it.

Field: Name of construction with shading

Name of the window construction that has the shade in place. The properties of the shade, such as transmittance and reflectance, are given by the shade material referenced in that construction (see Construction and Material:WindowShade). For Control Type = SwitchableGlazing, this is the name of window construction that corresponds to the window in its fully-switched (darkest) state.

Field: Trigger

The variable that controls the shading device. When its set point value is exceeded the shading device is “triggered,” i.e., it covers the glass, or, for Control Type = SwitchableGlazing, the glass is darkened.

The choices for Trigger are the following. The units of the corresponding SetPoint are shown in parentheses.

Schedule: The schedule specified by Schedule Name. The window is shaded if the schedule value = 1, unshaded if the schedule value = 0.

SolarOnWindow: Beam plus diffuse solar incident on the (unshaded) window (W/m^2).

HorizontalSolar: Total (beam plus diffuse) horizontal solar radiation (W/m^2).

OutsideAirTemp: Outside air temperature (C).

ZoneAirTemp: Previous time step’s zone air temperature (C).

ZoneCooling: Previous time step's zone cooling load (W).

ScheduleAndSolarOnWindow: Schedule and beam plus diffuse solar incident on the (unshaded) window (W/m^2)

ScheduleAndHorizontalSolar: Schedule and total (beam plus diffuse) horizontal solar radiation (W/m^2).

ScheduleAndOutsideAirTemp: Schedule and outside air temperature (C).

ScheduleAndZoneAirTemp: Schedule and previous time step's zone air temperature (C).

ScheduleAndZoneCooling: Schedule and previous time step's zone cooling load (W).

Glare: Daylight discomfort glare.

GlareOrSolarOnWindow: Daylight discomfort glare or beam plus diffuse solar incident on the (unshaded) window (W/m^2).

GlareOrHorizontalSolar: Daylight discomfort glare or total (beam plus diffuse) horizontal solar radiation (W/m^2).

GlareOrOutsideAirTemp: Daylight discomfort glare or outside air temperature (C).

GlareOrZoneAirTemp: Daylight discomfort glare or previous time step's zone air temperature (C).

GlareOrZoneCooling: Daylight discomfort glare or previous time step's zone cooling load (W).

DaylightIlluminance: Used only with Control Type = SwitchableGlazing in zones with daylighting controls. In this case the transmittance of the glazing is adjusted to just meet the daylight illuminance set point at the first daylighting reference point (see "Daylighting").

Field: Schedule Name

The name of a schedule for use with triggers of that involve a schedule. See Trigger.

Field: SetPoint

The trigger setpoint for activating window shading. The units depend on the type of trigger: W/m^2 for solar triggers, degrees C for temperature triggers, and W for the zone cooling trigger. The shade is activated when the trigger value exceeds the set point. SetPoint is unused for Trigger = Schedule, Glare and DaylightIlluminance.

```
WindowShadingControl,
  A1 , \field User Supplied Shading Control Name
       \type alpha
       \note Referenced by surfaces that are exterior windows or glass doors
       \note Not used by interzone windows or glass doors
  A2 , \field Control type
       \type choice
       \key InteriorNonInsulatingShade
       \key ExteriorNonInsulatingShade
       \key InteriorInsulatingShade
       \key ExteriorInsulatingShade
       \key SwitchableGlazing
  A3 , \field Name of construction with shading
  A4 , \field Trigger
       \type choice
       \key Schedule
       \key SolarOnWindow
       \key HorizontalSolar
       \key OutsideAirTemp
       \key ZoneAirTemp
       \key ZoneCooling
       \key ScheduleAndSolarOnWindow
       \key ScheduleAndHorizontalSolar
       \key ScheduleAndOutsideAirTemp
       \key ScheduleAndZoneAirTemp
       \key ScheduleAndZoneCooling
       \key Glare
       \key GlareOrSolarOnWindow
       \key GlareOrHorizontalSolar
       \key GlareOrOutsideAirTemp
       \key GlareOrZoneAirTemp
       \key GlareOrZoneCooling
       \key DaylightIlluminance
  A5 , \field Schedule name
       \type object-list
       \object-list ScheduleNames
       \note Used only if Trigger = Schedule or ScheduleAndSolarOnWindow, etc.
       \note If Trigger = Schedule, schedule values are 0 = shading off, 1 = shading on
       \note If Trigger = ScheduleAndSolarOnWindow, etc., schedule values are
       \note 0 = shading off, 1 = shading on if SolarOnWindow, etc., test passes
  N1 ; \field SetPoint
       \units W/m2, W or deg C
       \note W/m2 for solar triggers, W for ZoneCooling triggers
       \note deg C for temperature triggers
       \note Unused for Trigger = Schedule, Glare and DaylightIlluminance
       \type real
```

An IDF example: window with interior roll shade that is deployed when solar incident on the window exceeds 50 W/m^2.

```
      .
      .
      .
MATERIAL:WindowGlass, GLASS - CLEAR SHEET 1 / 8 IN,  !- Material Name
    SpectralAverage, ! Optical data type {SpectralAverage or Spectral}
    ,                ! Name of spectral data set when Optical Data Type = Spectral
    0.003        ,  !- Thickness {m}
    0.837        ,  !- Solar Transmittance at Normal Incidence
    0.075        ,  !- Solar Reflectance at Normal Incidence: Front Side
    0.075        ,  !- Solar Reflectance at Normal Incidence: Back Side
    0.898        ,  !- Visible Transmittance at Normal Incidence
    0.081        ,  !- Visible Reflectance at Normal Incidence: Front Side
    0.081        ,  !- Visible Reflectance at Normal Incidence: Back Side
    0.0          ,  !- IR Transmittance
    0.8400000    ,  !- IR Emissivity: Front Side
    0.8400000    ,  !- IR Emissivity: Back Side
    0.9000000    ;  !- Conductivity {W/m-K}

MATERIAL:WindowShade, ROLL SHADE,  !- Material Name
    0.3          ,   !- Solar Transmittance at normal incidence
    0.5000000    ,   !- Solar Reflectance (same for front and back side)
    0.3          ,   !- Visible Transmittance at normal incidence
    0.5000000    ,   !- Visible reflectance (same for front and back side)
    0.9000000    ,   !- IR Emissivity (same for front and back side)
    0.05         ,   !- IR Transmittance
    0.003        ,   !- Thickness
    0.1          ;   !- Conductivity {W/m-K}

CONSTRUCTION, SINGLE PANE WITH NO SHADE,  ! Name of construction without shade
    GLASS - CLEAR SHEET 1 / 8 IN;  !- First material layer

CONSTRUCTION, SINGLE PANE WITH INT SHADE, ! Name of construction with shade
    GLASS - CLEAR SHEET 1 / 8 IN,  !- First material layer
    ROLL SHADE                  ;  !- Second material layer

WINDOWSHADINGCONTROL, CONTROL ON INCIDENT SOLAR,  !- Name of Shading Control
    InteriorNonInsulatingShade,   !- Shade type
    SINGLE PANE WITH INT SHADE,   !- Name of shaded construction
    SolarOnWindow,                !- Control type
    ,                             !- Schedule name
    50.0;                         !- Control set point {W/m2}
      .
      .
      .
Surface:HeatTransfer:Sub, Zn001:Wall001:Win001,  !- SubSurface Name
    Window                    ,    !- Class
    SINGLE PANE WITH NO SHADE,    !- Name of construction without shade
    Zn001:Wall001             ,    !- Base Surface Name
    ,                              !- Target
    0.5000000                 ,    !- VF to Ground
    CONTROL ON INCIDENT SOLAR,     !- Window Shading Control name
    ,                              !- Frame/Divider name
    1.0                       ,    !- Multiplier
    4                         ,    !- Number of vertices (assumed rectangular)
    0.548 ,  0.0 ,   2.5      ,    !- x,y,z of vertices {m}
    0.548 ,  0.0 ,   0.5      ,
    5.548 ,  0.0 ,   0.5      ,
    5.548 ,  0.0 ,   2.5      ;
      .
      .
      .
```

WindowFrameAndDivider

The WindowFrameAndDivider object is referenced by exterior windows that have a frame and/or a divider. A *frame* surrounds the glazing in a window (see illustrations, below). It is assumed that all frame characteristics, such as width, conductance and solar absorptance, are the same for the top, bottom and side elements of the frame. If the frame elements are not the same then you should enter area-weighted average values for the frame characteristics.

The window vertices that you specify in the Surface:HeatTransfer:Sub object are those of the glazed part of the window, not the frame. EnergyPlus automatically subtracts the area of the frame—determined from the glazing dimensions and the frame width—from the area of the wall containing the window.

A *divider* divides the glazing up into separate lites. It is assumed that all divider elements have the same characteristics. If not, area-weighted average values should be used. EnergyPlus automatically subtracts the divider area from the glazed area of the window.

In EnergyPlus, a window can have no frame and no divider, a frame and no divider, or a divider and no frame.

The best source of frame and divider characteristics is the WINDOW 5 program, which will calculate the values required by EnergyPlus for different frame and divider types. In particular, the THERM program within WINDOW 5 will calculate the effective conductance of frames and dividers; this is the conductance taking 2-D heat transfer effects into account.

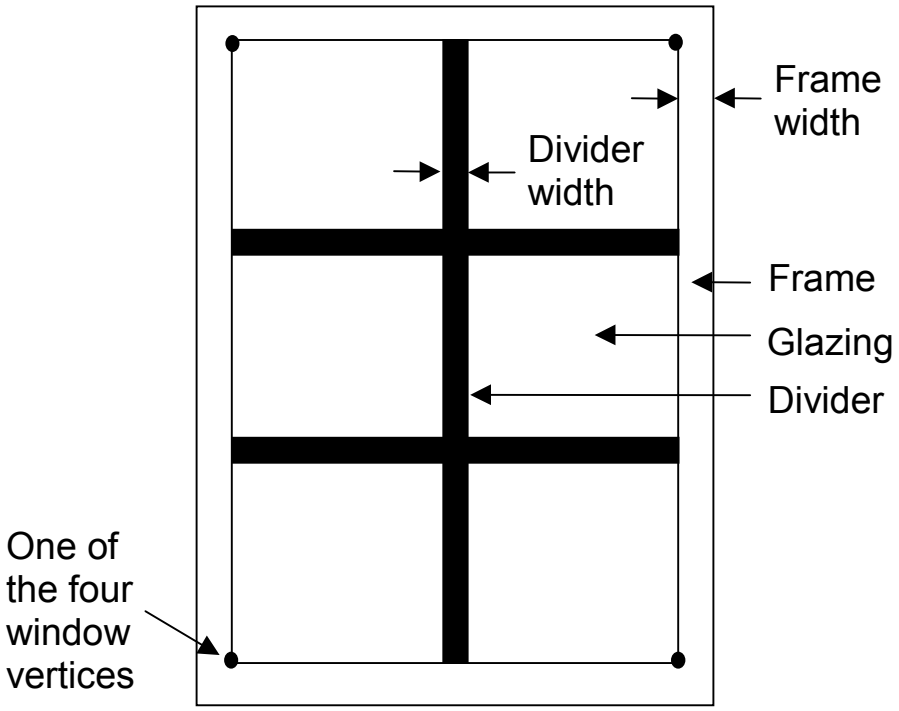

Figure 10. A window with a frame and divider.

In the illustration above, the divider has two horizontal elements and one vertical element.

Field: User Supplied Frame/Divider Name

The name of the frame/divider object. It is referenced by WindowFrameAndDivider Name in Surface:HeatTransfer:Sub.

Field: Frame Width

The width of the frame elements when projected onto the plane of the window. It is assumed that the top, bottom and side elements of the frame have the same width. If not, an average frame width should be entered such that the projected frame area calculated using the average value equals the sum of the areas of the frame elements.

Field: Frame Outside Projection

The amount by which the frame projects outward from the outside surface of the window glazing. If the outer surface of the frame is flush with the glazing, Frame Outside Projection = 0.0. Used to calculate shadowing of frame onto glass, solar absorbed by frame, IR emitted and absorbed by frame, and convection from frame.

Field: Frame Inside Projection

The amount by which the frame projects inward from the inside surface of the window glazing. If the inner surface of the frame is flush with the glazing, Frame Inside Projection = 0.0. Used to calculate solar absorbed by frame, IR emitted and absorbed by frame, and convection from frame.

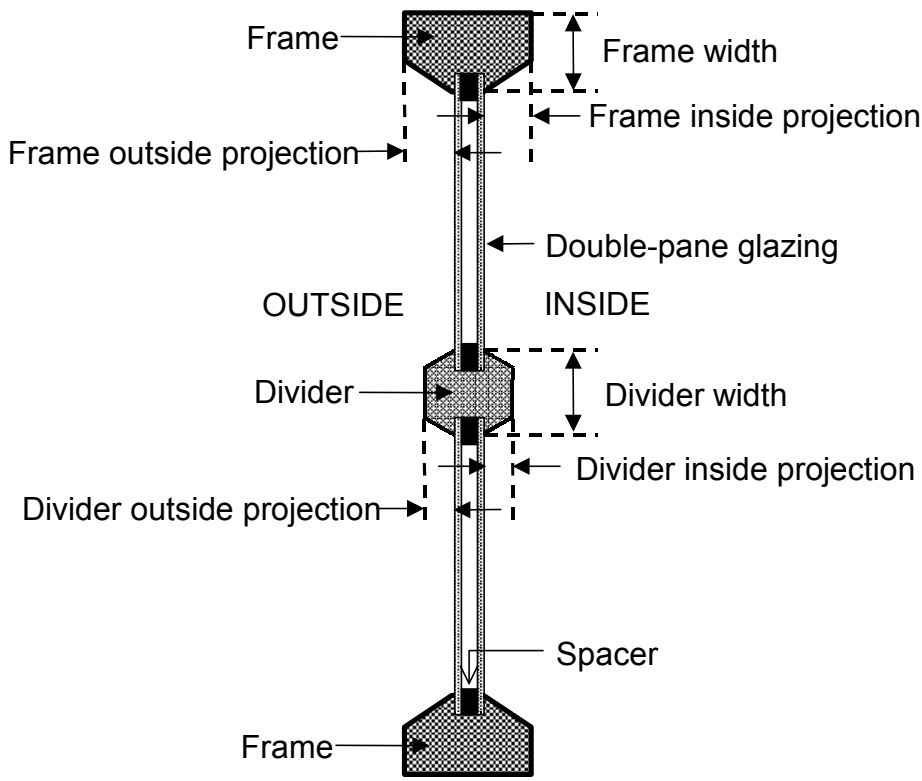

Figure 11. Illustration showing frame and divider dimensioning.

Field: Frame Conductance

The effective thermal conductance of the frame measured from inside to outside frame surface (no air films) and taking 2-D conduction effects into account. Obtained from WINDOW 5 or other 2-D calculation.

Field: Ratio of Frame-Edge Glass Conductance to Center-Of-Glass Conductance

The glass conductance near the frame (excluding air films) divided by the glass conductance at the center of the glazing (excluding air films). Used only for multi-pane glazing constructions. This ratio is greater than 1.0 because of thermal bridging from the glazing across the frame and across the spacer that separates the glass panes. Values can be obtained from WINDOW 5 for the user-selected glazing construction and frame characteristics.

Field: Frame Solar Absorptance

The solar absorptance of the frame. The value is assumed to be the same on the inside and outside of the frame and to be independent of angle of incidence of solar radiation.

Field: Frame Visible Absorptance

The visible absorptance of the frame. The value is assumed to be the same on the inside and outside of the frame and to be independent of angle of incidence of solar radiation.

Field: Frame Thermal Hemispherical Emissivity

The thermal emissivity of the frame, assumed the same on the inside and outside.

Field: Divider Type

The type of divider (see figure below). Divider Type = Suspended is applicable only to multi-pane glazing. It means that the divider is suspended between the panes. (If there are more than two glass layers, the divider is assumed to be placed between the two outermost layers.)

Divider Type = DividedLite means that the divider elements project out from the outside and inside surfaces of the glazing and divide the glazing into individual lites. For multi-pane glazing, this type of divider also has between-glass elements.

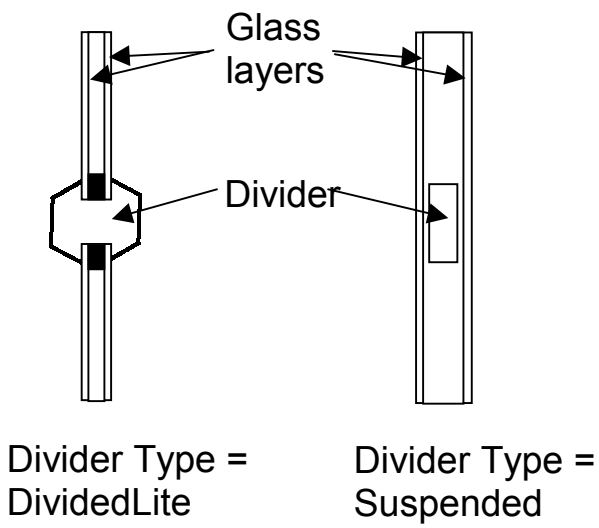

Figure 12. Illustration showing divider types.

Field: Divider Width

The width of the divider elements when projected onto the plane of the window. It is assumed that the horizontal and vertical divider elements have the same width. If not, an average divider width should be entered such that the projected divider area calculated using the average value equals the sum of the areas of the divider elements.

Field: Number of Horizontal Dividers

The number of divider elements parallel to the top and bottom of the window.

Field: Number of Vertical Dividers

The number of divider elements parallel to the sides of the window.

Field: Divider Outside Projection

The amount by which the divider projects out from the outside surface of the window glazing. For Divider Type = Suspended, Divider Projection = 0.0. Used to calculate shadowing of divider onto glass. Currently unused.

Field: Divider Inside Projection

The amount by which the divider projects inward from the inside surface of the window glazing. If the inner surface of the divider is flush with the glazing, Divider Inside Projection = 0.0. Used to calculate solar absorbed by frame, IR emitted and absorbed by frame, and convection from frame.

Field: Divider Conductance

The effective thermal conductance of the divider measured from inside to outside divider surface (no air films) and taking 2-D conduction effects into account. Obtained from WINDOW 5 or other 2-D calculation.

Field: Ratio of Divider-Edge Glass Conductance to Center-Of-Glass Conductance

The glass conductance near the divider (excluding air films) divided by the glass conductance at the center of the glazing (excluding air films). Used only for multi-pane glazing constructions. This

ratio is greater than 1.0 because of thermal bridging from the glazing across the divider and across the spacer that separates the glass panes. Values can be obtained from WINDOW 5 for the user-selected glazing construction and divider characteristics.

Field: Divider Solar Absorptance

The solar absorptance of the divider. The value is assumed to be the same on the inside and outside of the divider and to be independent of angle of incidence of solar radiation.

Field: Divider Visible Absorptance

The visible absorptance of the divider. The value is assumed to be the same on the inside and outside of the divider and to be independent of angle of incidence of solar radiation.

Field: Divider Thermal Hemispherical Emissivity

The thermal emissivity of the divider, assumed the same on the inside and outside.

```
WindowFrameAndDivider,
    A1 , \field User Supplied Frame/Divider Name
         \type alpha
         \reference WindowFrameAndDividerNames
         \note Referenced by surfaces that are exterior windows
         \note Not used by interzone windows
    N1 , \field Frame Width
         \units m
         \type real
         \minimum 0.0
         \default 0.0
         \note Width of frame in plane of window
         \note Frame width assumed the same on all sides of window
    N2 , \field Frame Outside Projection
         \units m
         \type real
         \minimum 0.0
         \default 0.0
         \note Amount that frame projects outward from the outside face of the glazing
    N3 , \field Frame Inside Projection
         \units m
         \type real
         \minimum 0.0
         \default 0.0
         \note Amount that frame projects inward from the inside face of the glazing
    N4 , \field Frame Conductance
         \units W/m2-K
         \type real
         \minimum 0.0
         \default 0.0
         \note Effective conductance of frame
         \note Excludes air films
         \note Obtained from WINDOW 5 or other 2-D calculation
    N5 , \field Ratio of Frame-Edge Glass Conductance to Center-Of-Glass Conductance
         \type real
         \minimum 1.0
         \maximum 4.0
         \default 1.0
         \note Excludes air films
         \note Obtained from WINDOW 5 or other 2-D calculation
    N6 , \field Frame Solar Absorptance
         \type real
         \minimum 0.0
         \maximum 1.0
         \default 0.0
         \note Assumed same on outside and inside of frame
    N7 , \field Frame Visible Absorptance
         \type real
         \minimum 0.0
         \maximum 1.0
         \default 0.0
         \note Assumed same on outside and inside of frame
    N8 , \field Frame Thermal Hemispherical Emissivity
         \type real
         \minimum> 0.0
         \default 0.9
         \note Assumed same on outside and inside of frame
    A2 , \field Divider Type
         \type choice
         \key DividedLite
         \key Suspended
    N9 , \field Divider Width
         \units m
         \type real
         \minimum 0.0
         \default 0.0
         \note Width of dividers in plane of window
         \note Width assumed the same for all dividers
    N10, \field Number of Horizontal Dividers
         \type real
         \minimum 0
```

```
     \default 0
     \note "Horizontal" means parallel to local window X-axis
N11, \field Number of Vertical Dividers
     \type real
     \minimum 0
     \default 0
     \note "Vertical" means parallel to local window Y-axis
N12, \field Divider Outside Projection
     \units m
     \type real
     \minimum 0.0
     \default 0.0
     \note Amount that divider projects outward from the outside face of the glazing
     \note Outside projection assumed the same for all divider elements
N13, \field Divider Inside Projection
     \units m
     \type real
     \minimum 0.0
     \default 0.0
     \note Amount that divider projects inward from the inside face of the glazing
     \note Inside projection assumed the same for all divider elements
N14, \field Divider Conductance
     \units W/m2-K
     \type real
     \minimum 0.0
     \default 0.0
     \note Effective conductance of divider
     \note Excludes air films
     \note Obtained from WINDOW 5 or other 2-D calculation
N15 ,\field Ratio of Divider-Edge Glass Conductance to Center-Of-Glass Conductance
     \type real
     \minimum 1.0
     \maximum 4.0
     \default 1.0
     \note Excludes air films
     \note Obtained from WINDOW 5 or other 2-D calculation
N16, \field Divider Solar Absorptance
     \type real
     \minimum 0.0
     \maximum 1.0
     \default 0.0
     \note Assumed same on outside and inside of divider
N17, \field Divider Visible Absorptance
     \type real
     \minimum 0.0
     \maximum 1.0
     \default 0.0
     \note Assumed same on outside and inside of divider
N18; \field Divider Thermal Hemispherical Emissivity
     \type real
     \minimum> 0.0
     \default 0.9
     \note Assumed same on outside and inside of divider
```

An IDF example:

```
WindowFrameAndDivider,
    TestFrameAndDivider, ! Frame/Divider Name
    0.05, ! Frame Width
    0.04, ! Frame Outside Projection
    0.03, ! Frame Inside Projection
    5.0,  ! Frame Conductance
    1.3,  ! Ratio of Frame-Edge Glass Conductance to Center-Of-Glass Conductance
    0.8,  ! Frame Solar Absorptance
    0.8,  ! Frame Visible Absorptance
    0.9,  ! Frame Thermal Emissivity
    DividedLite, ! Divider Type
    0.03, ! Divider Width
    2,    ! Number of Horizontal Dividers
    2,    ! Number of Vertical Dividers
    0.03, ! Divider Outside Projection
    0.03, ! Divider Inside Projection
    5.0,  ! Divider Conductance
    1.3,  ! Ratio of Divider-Edge Glass Conductance to Center-Of-Glass Conductance
    0.8,  ! Divider Solar Absorptance
    0.8,  ! Divider Visible Absorptance
    0.9;  ! Divider Thermal Emissivity
```

Other Side Coefficients

By referencing the Other Side Coefficients statement in the surface statements (i.e. Outside Face Environment), the temperature of the outer plane of a surface (see Figure 13) can be directly controlled. Other side coefficients can also be used to control the exterior convective heat transfer coefficient of a surface and the corresponding exterior air temperature. It should be noted that solar effects are not accounted for when other side coefficients are used. In addition, if other side coefficients are specified for a surface, they also hold for subsurfaces of that surface (though subsurfaces can have their own coefficient set).

Other side coefficients have the same effect on all types of heat transfer surfaces. In other words, an interior surface with other side coefficients specified and an exterior wall with identical other side coefficients specified are simulated exactly the same. A surface that uses other side coefficients should be thought of as a new or separate type of surface. All heat transfer surfaces are simulated in the same manner through conduction transfer functions. The only difference between the various types of heat transfer surfaces is the environment on the other side of the surface. For example, the other side environment of an exterior surface is the outdoor environment. For an interior surface, the temperature of the outer plane of the surface is set equal to the temperature of the inner plane of the surface. Similarly, a surface with other side coefficients specified will allow the user to control the other side environment.

```
OtherSideCoefficients,
  A1, \field OtherSideCoeff Name
      \reference OSCNames
  N1, \field Combined convective/radiative film coefficient
      \note if=0, use other coefficients
      \type real
  N2, \field User selected Constant Temperature
      \units C
      \type real
  N3, \field Coefficient modifying the user selected constant temperature
  N4, \field Coefficient modifying the external dry bulb temperature
      \type real
  N5, \field Coefficient modifying the ground temperature
      \type real
  N6, \field Coefficient modifying the wind speed term (s/m)
      \type real
  N7; \field Coefficient modifying the zone air temperature part of the equation
      \type real
```

Heat transfer through a surface is an extremely important component in the calculation of zone loads. The information to calculate this heat transfer is readily available if the surface is exposed to the outdoor environment or to another zone that is being simulated. Occasionally, a user will want to model the heat transfer through a surface that is adjacent to an area that is not included in the EnergyPlus model. For example, an office area is attached to a warehouse and the user is only interested in simulating the office area. An interior surface with other side coefficients specified could be used to control the environment on the other side of the surface, thereby accounting for the heat transfer through the adjoining surface.

Other Side Coefficients affects the "other side" of a surface as described below. Each coefficient has a special meaning. You may enter a 0 or blank if you are not using a particular coefficient. Note that there are two potential ways to use other side coefficients. Either they are used to set the temperature of the exterior side surface directly (if the combined convective/radiative coefficient below is less than or equal to zero) or to set both the film coefficient (positive value for the combined convective/radiative coefficient below) and the outside air temperature.

Field: OtherSideCoeff Name

This, of course, is the string referenced in the Surface statement that is using OtherSideCoeff as the Exterior Environment.

Field: Combined convective/radiative film coefficient

This is a trigger value. If the value is greater than zero, then it is taken to be the combined convective/radiative film coefficient. In this case (value > 0), the remaining fields are used first to calculate the outside air temperature for the surface and then to calculate the outside surface temperature based on the outside air temperature and the film coefficient. If this field is less than or equal to zero, then the remaining fields are used to calculate the surface temperature (not the outside air temperature). The units for this field are the same as for a convective heat transfer coefficient: $W/(m^2*K)$.

Field: User selected constant temperature

This field is used to define a temperature that remains a constant part of the calculation either of the surface or outside air temperature. This parameter is shown as “C5” in the equation below. The units for this parameter are C.

Field: Coefficient modifying the user selected constant temperature

This field is used to define a temperature that remains a constant coefficient that is applied to the constant temperature (see previous field). This parameter is shown as “C4” in the equation below. This parameter is dimensionless.

Field: Coefficient modifying the external dry bulb temperature

This field is used to define a temperature that remains a constant coefficient that is applied to the outside air dry bulb temperature. This parameter is shown as “C3” in the equation below. This parameter is dimensionless.

Field: Coefficient modifying the ground temperature

This field is used to define a temperature that remains a constant coefficient that is applied to the ground temperature. This parameter is shown as “C6” in the equation below. This parameter is dimensionless.

Field: Coefficient modifying the wind speed term

This field is used to define a temperature that remains a constant coefficient that is applied to the product of the outside air dry bulb temperature and the wind speed. This parameter is shown as “C7” in the equation below. This parameter has dimensions of inverse velocity or s/m.

Field: Coefficient modifying the zone air temperature part of the equation

This field is used to define a temperature that remains a constant coefficient that is applied to the temperature of the zone to which this surface belongs. This parameter is shown as “C2” in the equation below. This parameter is dimensionless.

The coefficients listed above are used in the following equation:

$$T = \frac{(C2*Tzone+C3*Toadb+C4*C5+C6*Tgrnd+C7*Wspd*Toadb)}{(C2+C3+C4+C6+C7*Wspd)}$$

where:

Tzone = Temperature of the zone being simulated (°C)

Toadb = Dry bulb temperature of the outdoor air (°C)

Tgrnd = Temperature of the ground (°C)

Wspd = Outdoor wind speed (m/sec)

If C1 is greater than zero, C1 is the external convective heat transfer coefficient, and T is the surrounding air temperature. Otherwise, T is the temperature of the outer plane of the surface.

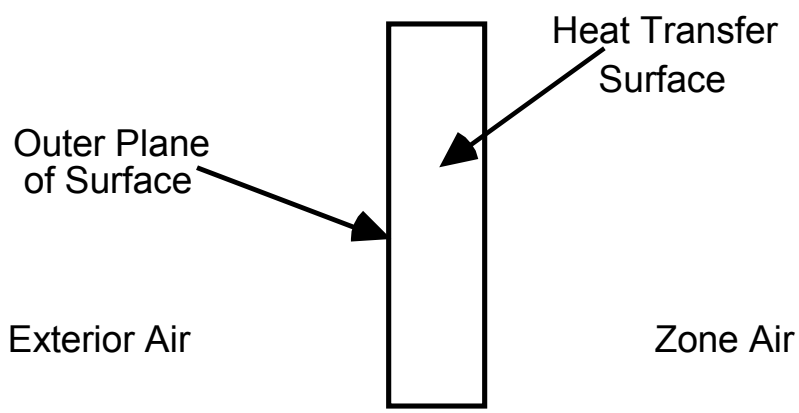

Figure 13. Illustration for Other Side Coefficients

```
OtherSideCoefficients, OSCCoef:Zn005:Wall003, !- OSC Name
  0.0000000E+00,  !- OSC SurfFilmCoef
   4.000000    ,  !- OSC Temp
   3.000000    , !- OSC Temp Coef
   2.000000    ,  !- OSC dry-bulb
   5.000000    ,  !- OSC GrndTemp
   6.000000    ,  !- OSC WindSpdCoef
   1.000000    ;  !- OSC ZoneAirTemp
 OtherSideCoefficients, OSCCoef:Zn005:Wall004, !- OSC Name
   1.230000    ,  !- OSC SurfFilmCoef
   5.000000    ,  !- OSC Temp
   4.000000    , !- OSC Temp Coef
   3.000000    ,  !- OSC dry-bulb
   6.000000    ,  !- OSC GrndTemp
   7.000000    ,  !- OSC WindSpdCoef
   2.000000    ;  !- OSC ZoneAirTemp
```

Movable Insulation

Movable insulation can be used/scheduled on a surface. In this case, no reference is made in the surface that is using the insulation – rather the movable insulation statement references the surface.

While movable insulation has not yet undergone rigorous testing and probably does not work correctly at the editing of this document (8/7/2000), the underlying principle has been implemented in EnergyPlus. Basically, the addition of movable insulation allows the user to schedule an extra amount of insulation on either the inside or outside surface of a wall (or both). The insulation must be a simple, homogenous material layer (linked to a material definition within the input data file). Note that the code appears to allow some ability to make this layer transparent to short wavelength radiation (solar). In this case, incident solar is split between the plane between the movable insulation and the surface and the plane between the movable insulation and the surrounding air. This calculation is very basic and based on the solar transmittance of the insulation layer (material properties).

Field: Insulation Type

This field determines whether the movable insulation is applied to the inside or the outside of the surface by entering either “Interior” or “Exterior”, respectively.

Field: SurfaceName

This field refers the movable insulation back to a particular surface (ref: Surface:HeatTransfer) via its user assigned name so that EnergyPlus knows where to apply this extra layer of insulation. This will affect either the inside or outside surface heat balance of this surface depending on the value in the insulation type field (see previous field).

Field: MaterialMovInsul

This field refers to a material layer (ref: Material:Regular or Material:Regular-R) via its user assigned name. This provides the program with a full complement of material properties so that the effect of the insulation (R-value and solar transmittance) can be correctly taken into account by EnergyPlus.

Field: SchedMovInsul

This field is a schedule that theoretically can be any positive real number but was originally intended to be a parameter between 0.0 and 1.0. Its purpose is to act as a fractional modifier on the resistance of the material layer. The actual thermal resistance of the movable insulation is equal to the resistance of the material layer times the current value in the movable insulation schedule. A value of 0.0 simply means that the movable insulation is not present.

```
MovableInsulation,
      \memo Exterior or Interior Insulation on surfaces
  A1, \field Insulation Type
      \type choice
      \key Exterior
      \key Interior
  A2, \field SurfaceName
      \type object-list
      \object-list SurfaceNames
  A3, \field MaterialMovInsul- Name of the material used for movable insulation
  A4; \field SchedMovInsul-Schedule for movable insulation
       \type object-list
       \object-list ScheduleNames
```

Zone Description/Geometry Output

In addition to the canned Surface reports (view the Reports section later in this document), the following variables are available for all zones:

```
Zone,Average,Mean Air Temperature[C]
Zone,Sum,Zone-Total Latent Gain[J]
Zone,Sum,Zone-Total Radiant Heat Gain[J]
Zone,Sum,Zone-Total Convective Heat Gain[J]
Zone,Sum,Zone-Total Lost Heat Gain[J]
Zone,Sum,Zone-Total Electric Consumption[J]
Zone,Average,Surface Inside Temperature[C]
Zone,Average,Surface Outside Temperature[C]
Zone,Average,Surface Int Convection Coeff[W/m2-K]
Zone,Average,Surface Ext Convection Coeff[W/m2-K]
Zone,Average,Window Shading Status []
Zone,Average,Mean Radiant Temperature[C]
HVAC,Sum,Zone/Sys Sensible Heating Energy[J]
HVAC,Sum,Zone/Sys Sensible Cooling Energy[J]
HVAC,Average,Zone/Sys Sensible Heating Rate[W]
HVAC,Average,Zone/Sys Sensible Cooling Rate[W]
HVAC,Average,Zone/Sys Air Temp[C]
HVAC,Average,Zone Air Humidity Ratio[]
```

Two of these are of particular interest:

```
Zone,Average,Mean Air Temperature[C]
HVAC,Average,Zone/Sys Air Temp[C]
```

These two variable outputs are/should be identical. However, note that they can be reported at different time intervals. “Mean Air Temperature” is only available on the Zone/HB time step (Time Steps in Hour) whereas “Zone/Sys Air Temp” can be reported at the HVAC time step (which can vary).

Group – Space Gains

Not all the influence for energy consumption in the building is due to envelope and ambient conditions. This group of objects describes other internal gains that may come into play (People, Lights, Various Equipment Types).

People

The people statement is used to model the occupant’s affect on the space conditions. The following definition addresses the basic affects as well as providing information that can be used to report the thermal comfort of a group of occupants. Both the Fanger and the Pierce Two-Node thermal comfort models are available in EnergyPlus. A user may select one or both of these models for each People statement by simply adding the appropriate choice keyword after the air velocity schedule name. Thermal comfort calculations will only be made for people statements that request them.

Field: Zone Name

This field is the name of the zone (ref: Zone) and attaches a particular people statement to a thermal zone in the building.

Field: Number of People

This field is typically used to represent the maximum number of people in a zone that is then multiplied by a schedule fraction (see next field). In EnergyPlus, this is slightly more flexible in that the number of people could be a "diversity factor" applied to a schedule of real numbers. Note that while the schedule value can vary from hour to hour, the number of people field is constant for all simulation environments.

Field: Number of People Schedule Name

This field is the name of the schedule (ref: Schedule) that modifies the number of people parameter (see previous field). The schedule values can be any positive number. The actual number of people in a zone as defined by this statement is the product of the number of people field and the value of the schedule specified by name in this field.

Field: Fraction Radiant

This field is a decimal number between 0.0 and 1.0 and is used to characterize the type of heat being given off by people in a zone. The number specified in this field will be multiplied by the total sensible energy emitted by people to give the amount of long wavelength radiation gain from human beings in a zone. The remainder of the sensible load is assumed to be convective heat gain. Note that latent gains from people are not included in either the radiant or convective heat gains.

Field: Activity Level Schedule Name

This field is the name of the schedule (ref: Schedule) that determines the amount of heat gain per person in the zone under design conditions. This value is modified somewhat based on a correlation to account for variations in space temperature. The schedule values may be any positive number and the units for this parameter is Watts per person.

Field: People Group Name

This field is a name that may be different from the zone name to clarify reporting output. This identifier can be used to distinguish between multiple people statements in a single zone. The identifying name will show up in the EnergyPlus output files to assist the user in interpreting output.

Field: MRT Calculation Type

This field specifies the type of MRT calculation the user wishes to use for the thermal comfort model. At the present time, there are two options for MRT calculation type: zone averaged and surface weighted. The default calculation is "Zone Averaged". In the zone averaged MRT calculation, the MRT used for the thermal comfort calculations is for an "average" point in the zone. MRT is calculated based on an area-emissivity weighted average of all of the surfaces in the zone. In cases where the emissivity of all of the surfaces are sufficiently small (near zero), the mean radiant temperature will be set to the mean air temperature of the space to avoid divide by zero errors. The other MRT calculation type is "Surface Weighted". The goal of this calculation type is to estimate a person in the space close to a particular surface without having to define exact view factors for all of the surfaces and the location of the person in the space. The MRT used in the thermal comfort calculations when the "surface weighted" calculation type is selected is actually the average of the temperature of the surface to which the person is closest (defined by the next field "Surface Name") and the zone averaged MRT (defined above). The surface temperature alone is not used because in theory the maximum view factor from a person to any flat surface is roughly

0.5. In the "surface weighted" calculation, the surface in question actually gets slightly more weighting than 50% since the surface selected is still a part of the zone average MRT calculation. Again, this simplification was made to avoid the specification of view factors and the exact location of the person.

Field: Surface Name

This field is only valid when the user selects "surface weighted" for the MRT calculation type (see the previous input field description). In this case, the field is the name of a surface (ref: Surface) within the zone the people are residing. This surface will be used in the MRT calculation as defined above to come up with a more representative MRT for a person near a particular surface. The MRT used for thermal comfort calculations using the "surface weighted" MRT calculation method is the average of the temperature of the surface specified in this field and the "zone averaged" MRT (see the MRT calculation type field above).

Field: Work Efficiency Schedule Name

This field is the name of the schedule (ref: Schedule) that determines the efficiency of energy usage within the human body. A value of zero relates to all of the energy produced in the body being converted to heat. A value of unity corresponds to the body converting all of the energy produced in the body being converted to mechanical energy. The values for this parameter defined in the schedule must be between 0.0 and 1.0. Any value greater than zero will result in a reduction of heat input to the zone since the mechanical energy is assumed to be used for some physical task that does not impact the thermal energy balance on the space.

Field: Clothing Insulation Schedule Name

This field is the name of the schedule (ref: Schedule) that defines the amount of clothing being worn by a typical zone occupant during various times in the simulation period. This parameter must be a positive real number and has units of Clo.

Field: Air Velocity Schedule Name

This field is the name of the schedule (ref: Schedule) that approximates the amount of air movement in the space as a function of time throughout the simulation period. The user has control over this parameter through the schedule that requires the individual numbers in the schedule to be positive real numbers having units of meters per second.

Field: Thermal Comfort Report Type (up to 3 allowed)

The final one to three fields are optional and are intended to trigger various thermal comfort models within EnergyPlus. By entering the keywords FANGER or PIERCE, the user signifies that either the Fanger or the Pierce Two-Node Thermal Comfort Model results are requested from EnergyPlus for this particular people statement. Note that since up to three models may be specified, the user may opt to have EnergyPlus calculate the thermal comfort for people identified with this people statement using both the Fanger and Pierce models.

```
PEOPLE,
  A1 , \field Zone Name
       \type object-list
       \object-list ZoneNames
  N1 , \field Number of People
       \type real
       \minimum 0
  A2 , \field Number of People SCHEDULE Name (real--fraction)
       \type object-list
       \object-list ScheduleNames
  N2 , \field Fraction Radiant
       \type real
       \minimum 0.0
       \maximum 1.0
  A3 , \field Activity level SCHEDULE Name (units W/person, real)
              ! Note that W has to be converted to mets in TC routine
       \type object-list
       \object-list ScheduleNames
  A4 , \field PEOPLE Group Name
       \type alpha
       \reference PeopleGroups
       \note This Group Name is used only in Thermal Comfort Reporting.
       \note If used, then the remaining Thermal Comfort parameters must be entered.
       \note If left blank, then the Zone Name will be used.
  A5 , \field MRT Calculation Type
       \note optional (only required for thermal comfort runs)
       \type choice
       \key ZoneAveraged
       \key SurfaceWeighted
       \default ZoneAveraged
  A6 , \field Surface Name
       \type object-list
       \object-list SurfaceNames
       \note optional (only required for thermal comfort runs)
  A7 , \field Work Efficiency SCHEDULE Name (0.0-1.0,real)
       \type object-list
       \object-list ScheduleNames
       \note optional (only required for thermal comfort runs)
  A8 , \field Clothing Insulation SCHEDULE Name (real)
       \type object-list
       \object-list ScheduleNames
       \note optional (only required for thermal comfort runs)
  A9 , \field Air Velocity SCHEDULE Name (units m/s, real)
       \type object-list
       \object-list ScheduleNames
       \note optional (only required for thermal comfort runs)
  A10 , \field Thermal Comfort Report Type
       \type choice
       \key Fanger
       \key Pierce
       \key KSU
       \note optional (only required for thermal comfort runs)
  A11 , \field Thermal Comfort Report Type
       \type choice
       \key Fanger
       \key Pierce
       \key KSU
       \note optional (second thermal comfort report type)
  A12 ; \field Thermal Comfort Report Type
       \type choice
       \key Fanger
       \key Pierce
       \key KSU
       \note optional (third thermal comfort report type)
```

The following IDF example allows for a maximum of 31 people with scheduled occupancy of “Bldg Sch 5”, 60% radiant using an Activity Schedule of “Activity Sch”. The example allows for thermal comfort reporting.

```
PEOPLE, DORM ROOMS AND COMMON AREAS, ! Int Gain Type and Zone
   31.00000    ,  ! "Maximum" Number of People
   BLDG Sch   5,  ! Occupancy Schedule
  0.6000000    ,  ! Fraction Radiant
   Activity Sch,  ! Activity Level Schedule Name
    , ! Take default name for people (Zone Name)
   zoneaveraged,  ! MRT calculation type
    ,             ! Surface name
   Work Eff Sch,  ! Work Efficiency Schedule Name
   Clothing Sch,  ! Clothing Insulation Schedule
   Air Velo Sch,  ! Air Velocity Schedule
   FANGER      ,  ! Calculate Thermal Comfort Using Fanger Model
   PIERCE      ,  ! Calculate Thermal Comfort Using Pierce Model
   KSU         ;  ! Calculate Thermal Comfort Using KSU Model
```

A simpler example, without using the thermal comfort reporting option:

```
PEOPLE, DORM ROOMS AND COMMON AREAS, ! Int Gain Type and Zone
   31.00000    ,  ! "Maximum" Number of People
   BLDG Sch   5,  ! Occupancy Schedule
  0.6000000    ,  ! Fraction Radiant
   Activity Sch;  ! Activity Level Schedule Name
```

People Output

People specific outputs include:

```
Zone,Average,People-Number of Occupants[]
Zone,Sum,People-Radiant Heat Gain[J]
Zone,Sum,People-Convective Heat Gain[J]
Zone,Sum,People-Sensible Heat Gain[J]
Zone,Sum,People-Latent Heat Gain[J]
Zone,Average,FangerPMV
Zone,Average,PiercePMVET
Zone,Average,PiercePMVSET
Zone,Average,PierceDISC
Zone,Average,PierceTSENS
Zone,Average,KsuTSV
```

Field: People-Number of Occupants[]

This field is simply the number of people within the zone during the time step in question.

Field: People-Radiant Heat Gain[J]

This field is the amount of radiant heat gain from people within the zone in Joules. This is determined by the current sensible heat gain from people to the zone and the “Fraction Radiant” specified in the input. The radiant gains from people are distributed to the surfaces using an area weighting scheme.

Field: People-Convective Heat Gain[J]

This field is the amount of convective heat gain from people within the zone in Joules. This is determined by the current sensible heat gain from people to the zone and the “Fraction Radiant” specified in input. Note that the radiant and convective gains should add up to the sensible heat gain from people. The convective heat gain from people is added to the zone air heat balance directly.

Field: People-Sensible Heat Gain[J]

This field is the amount of sensible heat gain from people within the zone in Joules. This amount is based on the number of people in the space as well as the total amount of energy produced by a typical person defined by the activity schedule in the input. An internal algorithm is used to

determine what fraction of the total is sensible and what fraction is latent. The sensible plus the latent heat gain from people equals the total gain specified in the input.

Field: People-Latent Heat Gain[J]

This field is the amount of latent heat gain from people within the zone in Joules. This amount is based on the number of people in the space as well as the total amount of energy produced by a typical person defined by the activity schedule in the input. An internal algorithm is used to determine what fraction of the total is sensible and what fraction is latent.

Field: FangerPMV

This field is the "predicted mean vote" (PMV) calculated using the Fanger thermal comfort model.

Field: PiercePMVET

This field is the "predicted mean vote" (PMV) calculated using the effective temperature and the Pierce two-node thermal comfort model.

Field: PiercePMVSET

This field is the "predicted mean vote" (PMV) calculated using the "standard" effective temperature and the Pierce two-node thermal comfort model.

Field: PierceDISC

This field is the "discomfort index" calculated using the the Pierce two-node thermal comfort model.

Field: PierceTSENS

This field is the "thermal sensation index" (PMV) calculated using the Pierce two-node thermal comfort model.

Field: KsuTSV

This field is the "thermal sensation vote" (TSV) calculated using the KSU two-node thermal comfort model.

Lights

Field: Zone Name

This field is the name of the zone (ref: Zone) and attaches a particular lighting statement to a thermal zone in the building.

Field: Schedule Name

This field is the name of the schedule (ref: Schedule) that modifies the design level parameter for lighting (see next field). The schedule values can be any positive number. The actual electrical input for lighting in a zone as defined by this statement is the product of the design level field and the value of the schedule specified by name in this field.

Field: Design Level

This field (in Watts) is typically used to represent the maximum electrical input to lighting fixtures in a zone that is then multiplied by a schedule fraction (see previous field). In EnergyPlus, this is slightly more flexible in that the lighting design level could be a "diversity factor" applied to a

schedule of real numbers. Note that while the schedule value can vary from hour to hour, the design level field is constant for all simulation environments.

Field: Return Air Fraction

This field is a decimal number between 0.0 and 1.0 and is used to characterize the way in which heat is being given off by lights in a zone. The number specified in this field will be multiplied by the total energy consumed by lights to give the amount of heat convected to the return air duct(s) serving the zone. The remainder of the electrical input from lights is broken into long and short wavelength radiant fractions with the next two parameters. The remaining portion of the electrical input is then assumed to be convected to the zone air. The assumption that was made for this implementation was for no system mass flow, or system OFF, the energy is added back to the zone in the zone correct temperature step. When there is system mass flow, or system ON, the energy is added to the zone outlet node.

Field: Fraction Radiant

This field is a decimal number between 0.0 and 1.0 and is used to characterize the type of heat being given off by lights in a zone. The number specified in this field will be multiplied by the difference between the total energy consumed by lights and the amount of energy convected to the return air duct to give the amount of long wavelength radiation gain from lights in a zone.

Field: Fraction Visible

This field is a decimal number between 0.0 and 1.0 and is used to characterize the type of heat being given off by lights in a zone. The number specified in this field will be multiplied by the difference between the total energy consumed by lights and the amount of energy convected to the return air duct to give the amount of short wavelength radiation gain from lights in a zone.

Field: Fraction Replaceable

This field is a decimal number between 0.0 and 1.0 and is used to determine what fraction of the artificial (electrical) lighting defined by this statement could potentially be replaced by daylighting. This reduces the amount of electrical input to the lights within the space and lowers the resulting heat addition to the zone and surface heat balances due to electrical lighting.

Field: LightsEndUseKey

This field allows the user to specify which light statements electrical consumption will appear on the end use meters (see Report Meter command). Two options are available: “GeneralLights” and “TaskLights”. If this field is omitted or blank, the lights will be assigned to the “GeneralLights” End Use.

```
LIGHTS,
  A1 , \field Zone Name
       \type object-list
       \object-list ZoneNames
  A2 , \field SCHEDULE Name
       \type object-list
       \object-list ScheduleNames
  N1 , \field Design Level
       \units W
       \type real
       \minimum 0
  N2 , \field Return Air Fraction
       \type real
       \minimum 0.0
       \maximum 1.0
  N3 , \field Fraction Radiant
       \type real
       \minimum 0.0
       \maximum 1.0
  N4 , \field Fraction Visible
       \type real
       \minimum 0.0
       \maximum 1.0
  N5 , \field Fraction Replaceable
       \type real
       \minimum 0.0
       \maximum 1.0
  A3 ; \field LightsEndUseKey
       \note if blank will be GeneralLights
       \type choice
       \key TaskLights
       \key GeneralLights
```

An IDF example:

```
LIGHTS, DORM ROOMS AND COMMON AREAS, BLDG Sch   1,  ! Int Gain Type, Zone, and Schedule
   1247.648    ,  ! Design Level {w}
  0.0000000E+00,  ! Return Air Fraction
  0.4000000    ,  ! Fraction Radiant
  0.2000000    ,  ! Fraction Visible
  0.5000000    ;  ! Fraction Replaceable
```

Lights Output

Lights variables have a slightly different flavor than the later equipments:

```
Zone,Sum,Lights-Return Air Heat Gain[J]
Zone,Sum,Lights-Radiant Heat Gain[J]
Zone,Sum,Lights-Convective Heat Gain[J]
Zone,Sum,Lights-Visible Heat Gain[J]
Zone,Sum,Lights-Total Heat Gain[J]
Zone,Sum,Lights-Electric Consumption[J]
```

Electric Equipment

Field: Zone Name

This field is the name of the zone (ref: Zone) and attaches a particular electric equipment statement to a thermal zone in the building.

Field: Schedule Name

This field is the name of the schedule (ref: Schedule) that modifies the design level parameter for electric equipment (see next field). The schedule values can be any positive number. The actual electrical input for equipment in a zone as defined by this statement is the product of the design level field and the value of the schedule specified by name in this field.

Field: Design Level

This field (in Watts) is typically used to represent the maximum electrical input to equipment in a zone that is then multiplied by a schedule fraction (see previous field). In EnergyPlus, this is slightly more flexible in that the electric equipment design level could be a "diversity factor" applied to a schedule of real numbers. Note that while the schedule value can vary from hour to hour, the design level field is constant for all simulation environments.

Field: Fraction Latent

This field is a decimal number between 0.0 and 1.0 and is used to characterize the way in which heat is being given off by electric equipment in a zone. The number specified in this field will be multiplied by the total energy consumed by equipment to give the amount of latent energy produced by the electric equipment. This energy affects the moisture balance within the zone. The remainder of the electrical input to equipment is assumed to be sensible energy that is broken into long wavelength radiant and "lost" fractions with the next two parameters. The remaining portion of the electrical input is then assumed to be convected to the zone air.

Field: Fraction Radiant

This field is a decimal number between 0.0 and 1.0 and is used to characterize the type of heat being given off by electric equipment in a zone. The number specified in this field will be multiplied by the difference between the total energy consumed by electric equipment and the amount of energy converted to latent energy (see previous field) to give the amount of long wavelength radiation gain from electric equipment in a zone.

Field: Fraction Lost

This field is a decimal number between 0.0 and 1.0 and is used to characterize the type of heat being given off by electric equipment in a zone. The number specified in this field will be multiplied by the difference between the total energy consumed by electric equipment and the amount of energy converted to latent energy (see previous field) to give the amount of heat which is "lost" and does not impact the zone energy balances. This might correspond to electrical energy converted to mechanical work or heat that is vented to the atmosphere.

```
ELECTRIC EQUIPMENT,
  A1 , \field Zone Name
       \type object-list
       \object-list ZoneNames
  A2 , \field SCHEDULE Name
       \type object-list
       \object-list ScheduleNames
  N1 , \field Design Level
       \units W
       \type real
       \minimum 0
  N2 , \field Fraction Latent
       \type real
       \minimum 0.0
       \maximum 1.0
  N3 , \field Fraction Radiant
       \type real
       \minimum 0.0
       \maximum 1.0
  N4 ; \field Fraction Lost
       \type real
       \minimum 0.0
       \maximum 1.0
```

An IDF example:

```
ELECTRIC EQUIPMENT, DORM ROOMS AND COMMON AREAS, BLDG Sch   6,  ! Int Gain Type, Zone, and Schedule
   9210.921    ,  ! Design Level {w}
  0.0000000E+00,  ! Fraction Latent
  0.3000000    ,  ! Fraction Radiant
  0.0000000E+00;  ! Fraction Lost
```

Gas Equipment

Field: Zone Name

This field is the name of the zone (ref: Zone) and attaches a particular gas equipment statement to a thermal zone in the building.

Field: Schedule Name

This field is the name of the schedule (ref: Schedule) that modifies the design level parameter for gas equipment (see next field). The schedule values can be any positive number. The actual energy input for gas equipment in a zone as defined by this statement is the product of the design level field and the value of the schedule specified by name in this field.

Field: Design Level

This field (in Watts) is typically used to represent the maximum energy input to gas equipment in a zone that is then multiplied by a schedule fraction (see previous field). In EnergyPlus, this is slightly more flexible in that the gas equipment design level could be a “diversity factor” applied to a schedule of real numbers. Note that while the schedule value can vary from hour to hour, the design level field is constant for all simulation environments.

Field: Fraction Latent

This field is a decimal number between 0.0 and 1.0 and is used to characterize the way in which heat is being given off by gas equipment in a zone. The number specified in this field will be multiplied by the total energy consumed by gas equipment to give the amount of latent energy produced by the gas equipment. This energy affects the moisture balance within the zone. The remainder of the energy input to gas equipment is assumed to be converted to sensible energy that is broken into long wavelength radiant and “lost” fractions with the next two parameters. The remaining portion of the energy input is then assumed to be convected to the zone air.

Field: Fraction Radiant

This field is a decimal number between 0.0 and 1.0 and is used to characterize the type of heat being given off by gas equipment in a zone. The number specified in this field will be multiplied by the difference between the total energy consumed by electric equipment and the amount of energy converted to latent energy (see previous field) to give the amount of long wavelength radiation gain from gas equipment in a zone.

Field: Fraction Lost

This field is a decimal number between 0.0 and 1.0 and is used to characterize the type of heat being given off by gas equipment in a zone. The number specified in this field will be multiplied by the difference between the total energy consumed by electric equipment and the amount of energy converted to latent energy (see previous field) to give the amount of heat which is “lost” and does not impact the zone energy balances. This might correspond to input energy converted to mechanical work or heat that is vented to the atmosphere.

```
GAS EQUIPMENT,
  A1 , \field Zone Name
       \type object-list
       \object-list ZoneNames
  A2 , \field SCHEDULE Name
       \type object-list
       \object-list ScheduleNames
  N1 , \field Design Level
       \units W
       \type real
       \minimum 0
  N2 , \field Fraction Latent
       \type real
       \minimum 0.0
       \maximum 1.0
  N3 , \field Fraction Radiant
       \type real
       \minimum 0.0
       \maximum 1.0
  N4 ; \field Fraction Lost
       \type real
       \minimum 0.0
       \maximum 1.0
```

An IDF example:

```
GAS EQUIPMENT, DORM ROOMS AND COMMON AREAS, BLDG Sch   2,  ! Int Gain Type, Zone, and Schedule
   29287.51    ,  ! Design Level {w}
  0.0000000E+00,  ! Fraction Latent
  0.3000000    ,  ! Fraction Radiant
  0.0000000E+00;  ! Fraction Lost
```

Other Equipment, Hot Water Equipment, Steam Equipment

In addition to Electric and Gas equipment types, Other (unspecified source), Hot Water and Steam equipment types are available. The definitions are the same as for GAS EQUIPMENT.

Equipment Output

The equipment types have identical reporting except for “type”.

```
Zone,Sum, <Equipment Type>-Total Heat Gain[J]
Zone,Sum, <Equipment Type>-Radiant Heat Gain[J]
Zone,Sum, <Equipment Type>-Convective Heat Gain[J]
Zone,Sum, <Equipment Type>-Latent Heat Gain[J]
Zone,Sum, <Equipment Type>-Lost Heat Gain[J]
Zone,Sum, <Equipment Type>-Consumption[J]
```

Where <Equipment Type> is:

Electric Eq for Electric Equipment

Gas Eq for Gas Equipment

Other Eq for Other Equipment

HotWater Eq for Hot Water Equipment

Steam Eq for Steam Equipment

For example:

```
Zone,Sum,Electric Eq-Total Heat Gain[J]
Zone,Sum,Electric Eq-Radiant Heat Gain[J]
Zone,Sum,Electric Eq-Convective Heat Gain[J]
Zone,Sum,Electric Eq-Latent Heat Gain[J]
Zone,Sum,Electric Eq-Lost Heat Gain[J]
Zone,Sum,Electric Eq-Consumption[J]
```

Daylighting

Two methods of daylighting calculation are allowed. If Total Daylighting Reference Points = 0 an "effectiveness" method is used in which input for Schedule, Fraction Beam Usable and Fraction Diffuse Usable determine how much electric lighting can be reduced based on the amount of solar radiation entering the zone.

If Total Daylighting Reference Points > 0 daylighting illuminance levels are calculated and then used to determine how much the electric lighting can be reduced. The daylight illuminance level in a zone depends on many factors, including sky condition; sun position; calculation point; location, size, and glass transmittance of windows; window shades; and reflectance of interior surfaces. Reduction of electric lighting depends on daylight illuminance level, illuminance set point, fraction of zone controlled and type of lighting control.

Field: Zone name

The name of the zone to which the following daylighting-related input applies.

The following three fields apply only if Total Daylighting Reference Points = 0:

Field: Schedule Name

The name of a schedule that acts as a multiplier on Fraction Beam Usable to account for hourly variations as sunlight patterns created by internal zone obstructions move across the room. The electric lighting power will be reduced by the amount of usable beam solar radiation plus the amount of usable diffuse solar radiation entering the zone up to the amount "replaceable" (see Fraction Replaceable under "Lights"). *Used only if Total Daylighting Reference Points = 0.*

Field: Fraction Beam Usable

The fraction of beam solar radiation entering the zone that can reduce electric lighting. *Used only if Total Daylighting Reference Points = 0.*

Field: Fraction Diffuse Usable

The fraction of diffuse solar radiation (from the sky and reflected from the ground) entering the zone that can reduce electric lighting. *Used only if Total Daylighting Reference Points = 0.*

Field: Total Daylighting Reference Points

Allowed values are 0,1 or 2. If Total Daylighting Reference Points = 0, the following inputs are not used and dimming of electric lights is calculated using Schedule Name, Fraction Beam Usable and Fraction Diffuse Usable, above.

If Total Daylighting Reference Points > 0 the value is the number of reference points in the zone (1 or 2) at which daylighting illuminance will be calculated based on input for the following fields.

The following fields apply only if Total Daylighting Reference Points > 0:

Fields: (X,Y,Z) of First Reference Point

The x, y and z coordinates, in the zone coordinate system, of the first daylighting reference point. Required if Total Daylighting Reference Points = 1 or 2. If you want to divide a thermal zone into two independently-controlled lighting zones, then Total Daylighting Reference Points should be set to 2 and (X,Y,Z) of Second Reference Point should also be specified. It is assumed that the

photocells that control the overhead electric lighting respond to the light levels at the specified reference points.

Fields: (X,Y,Z) of Second Reference Point

The x, y and z coordinates, in the zone coordinate system, of the second daylighting reference point. Required if Total Daylighting Reference Points = 2.

Field: Fraction of Zone Controlled by First Reference Point

The fraction of the zone's floor-area whose electric lighting is controlled by the daylight illuminance at the first reference point. If there is only one reference point then a fraction 1.0 – (Fraction of Zone Controlled by First Reference Point) is assumed to have no lighting control.

Field: Fraction of Zone Controlled by Second Reference Point

The fraction of the zone's floor-area whose electric lighting is controlled by the daylight illuminance at the second reference point. Required if Total Daylighting Reference Points = 2. A fraction, 1.0 – (Fraction of Zone Controlled by First Reference Point + Fraction of Zone Controlled by Second Reference Point), is assumed to have no lighting control.

Field: Illuminance SetPoint at First Reference Point

The desired lighting level (in lux) at the first reference point. This is the lighting level that would be produced at this reference point at night if the overhead electric lighting were operating at full input power.

Field: Illuminance SetPoint at Second Reference Point

The desired lighting level (in lux) at the second reference point. Required if Total Daylighting Reference Points = 2. This is the lighting level that would be produced at this reference point at night if the overhead electric lighting were operating at full input power.

Field: Lighting Control Type

The type of overhead electric lighting control. All reference points specified are assumed to have this type of control.

For Lighting Control Type = 1 (continuous), the overhead lights dim continuously and linearly from (maximum electric power, maximum light output) to (minimum electric power, minimum light output) as the daylight illuminance increases. The lights stay on at the minimum point with further increase in the daylight illuminance.

For Lighting Control Type = 2 (stepped), the electric power input and light output vary in discrete, equally spaced steps. The number of steps is given by Number of Steps (Excluding Off) of Stepped Control. For example, if Number of Steps = 3 and Illuminance Setpoint = 600, then the following table shows the fraction of the lights that are on vs. daylight illuminance.

Table 2. Stepped Lighting Control Example

Example of a Stepped Lighting Control System with Three Steps	
Daylight illuminance	**Fraction of lights that are on**
0-200	1.0
200-400	2/3
400-600	1/3
600 and above	0.0

Lighting Control Type = 3 (continuous/off) is the same as Lighting Control Type = 1 except that the lights switch off completely when the minimum dimming point is reached.

Field: Azimuth Angle of View Direction Relative to Window for Glare Calculation

Daylight glare from a window depends on occupant view direction. It is highest when you look directly at a window and decreases as you look away from a window. This field specifies the view direction for calculating glare. It is the angle, measured clockwise in the horizontal plane, between the zone y-axis and the occupant view direction.

Field: Maximum Allowable Discomfort Glare Index

If a daylit zone has windows with shading devices, the shades will be deployed if the daylight glare at the first reference point exceeds the value of this field. To get this type of glare control you have to specify Trigger = Glare, GlareOrSolarOnWindow, GlareOrHorizontalSolar, GlareOrOutsideAirTemp, GlareOrZoneAirTemp or GlareOrZoneLoad in WindowShadingControl for one or more windows in the zone (see WindowShadingControl).

If a zone has two or more windows with glare control, the shading devices will be deployed one by one in the order in which the windows are input until the glare level at each reference point falls below Maximum Allowable Discomfort Glare Index or is as close as possible to it.

The following table gives recommended values of Maximum Allowable Discomfort Glare Index.

Table 3. Recommended Values -- Discomfort Glare Index

Recommended Values of Maximum Allowable Discomfort Glare Index	
Activity or zone type	**Maximum Allowable Discomfort Glare Index**
Art Galleries	16
Factories	
Rough work	28
Engine assembly	26
Fine assembly	24
Instrument assembly	22
Hospital wards	18
Laboratories	22
Museums	20
Offices	22
School classrooms	20

Field: Minimum Input Power Fraction for Continuous Dimming Control

For Lighting Control Type = 1 (continuous), the lowest power the lighting system can dim down to, expressed as a fraction of maximum input power (see figure, below). For Lighting Control Type = 3 (continuous/off) this is the power fraction reached just before the lights switch off completely.

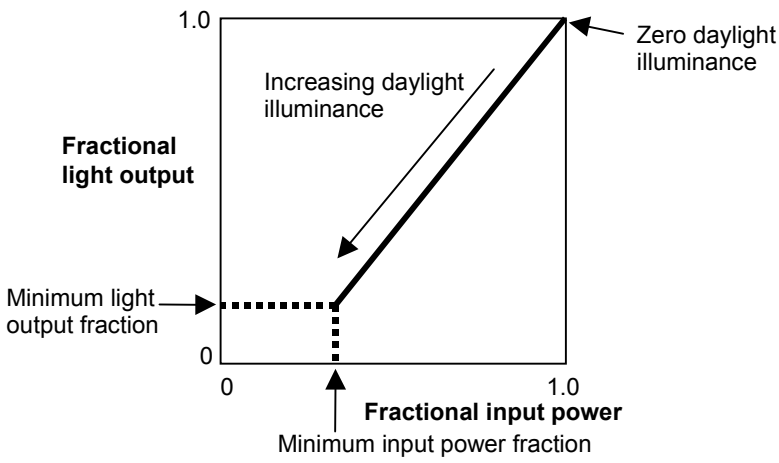

Figure 14. Illustration of continuous dimming relationship

The figure above shows the relationship between electric light output and electrical input.

Field: Minimum Light Output Fraction for Continuous Dimming Control

For Lighting Control Type = 1 (continuous), the lowest lighting output the lighting system can dim down to, expressed as a fraction of maximum light output (see figure, above). This is the fractional light output that the system produces at minimum input power. For Lighting Control Type = 3 (continuous/off) this is the power fraction reached just before the lights switch off completely.

Field: Number of Steps (Excluding Off) of Stepped Control

The number of steps, excluding off, in a stepped lighting control system (see figure, below). Required if Lighting Control Type = 2. The steps are assumed to be equally spaced.

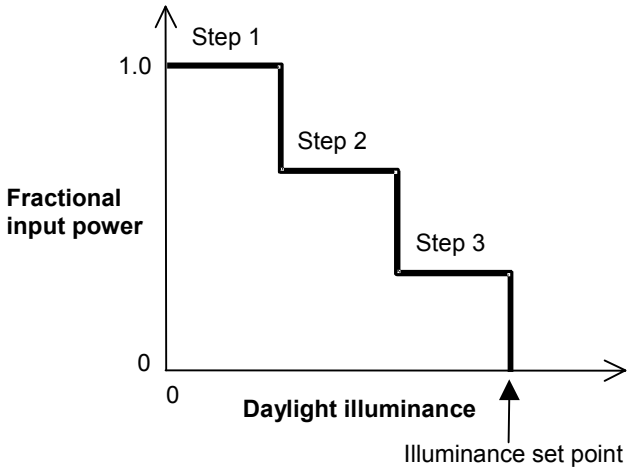

Figure 15. Stepped lighting control with Number of Steps = 3.

Field: Probability Lighting Will Be Reset When Needed in Manual Stepped Control

May be specified if a stepped lighting control system (Lighting Control Type = 2) is manually operated, such as in a simple, one-step (on-off) system. Gives the probability the occupants of a daylit zone will set the electric lights to the correct level to obtain the required illuminance. The rest

of the time the lights are assumed to be set one step too high. For example, consider an on-off lighting system (Number of Steps = 1) with a set point of 600 lux and 0.7 reset probability. Then, when daylighting exceeds 600 lux, the electric lights will be off 70% of the time and on 30% of the time.

```
DAYLIGHTING,
  A1 , \field Zone Name
       \type object-list
       \object-list ZoneNames
  A2 , \field SCHEDULE Name
       \type object-list
       \object-list ScheduleNames
  N1 , \field Fraction Beam Usable
       \type real
       \minimum 0.0
       \maximum 1.0
  N2 , \field Fraction Diffuse Usable
       \type real
       \minimum 0.0
       \maximum 1.0
  N3 , \field Total daylighting reference points
       \type real
  N4 , \field X-coordinate of first reference point
       \units m
       \type real
  N5 , \field Y-coordinate of first reference point
       \units m
       \type real
  N6 , \field Z-coordinate of first reference point
       \units m
       \type real
  N7 , \field X-coordinate of second reference point
       \units m
       \type real
  N8 , \field Y-coordinate of second reference point
       \units m
       \type real
  N9 , \field Z-coordinate of second reference point
       \units m
       \type real
  N10, \field Fraction of zone controlled by first reference point
       \type real
  N11, \field Fraction of zone controlled by second reference point
       \type real
  N12, \field Illuminance setpoint at first reference point
       \units lux
       \type real
  N13, \field Illuminance setpoint at second reference point
       \units lux
       \type real
  N14, \field Lighting control type
       \type integer
       \minimum 1
       \maximum 3
       \note 1=continuous,2=stepped,3=continuous/off
  N15, \field Azimuth angle of view direction clockwise from zone y-axis (for glare calculation)
       \units degrees
  N16, \field Maximum allowable discomfort glare index
       \type real
  N17, \field Minimum input power fraction for continuous dimming control
       \type real
  N18, \field Minimum light output fraction for continuous dimming control
       \type real
  N19, \field Number of steps (excluding off) for stepped control
       \type real
  N20; \field Probability lighting will be reset when needed in manual stepped control
       \type real
```

and IDF examples (simple and complex):

```
DAYLIGHTING, PSI FOYER, BLDG Sch   4,  ! Int Gain Type, Zone, and Schedule
  0.3500000    ,  ! Fraction Beam Usable
  0.6000000    ;  ! Fraction Diffuse Usable
```

and more complete/complex:

```
DAYLIGHTING,RESISTIVE ZONE, ! Zone Name
    TransOn,  ! Schedule
    ,         ! Fraction Beam Usable
    ,         ! Fraction Diffuse Usable
    1,        ! Total Daylighting Reference Points
    3.048,3.048,0.9,  ! X,Y,Z coordinates of first reference point {m}
    0.0,0.0,0.0,      ! X,Y,Z coordinates of second reference point, if present {m}
    0.99,             ! Fraction of zone controlled by first reference point
    0.0,              ! Fraction of zone controlled by second reference point, if present
    500.,             ! Illuminance setpoint at first reference point {lux}
    500.,             ! Illuminance setpoint at second reference point, if present {lux}
    1,                ! Lighting control type {1=continuous,2=stepped,3=continuous/off}
    180.0,            ! Azimuth angle of view direction for glare calculation {deg},
                      !   measured clockwise from zone y-axis. Value of 180 gives view
                      !   (from reference point) that is directly at window, maximizing glare.
    20.0,             ! Maximum discomfort glare index for window shade control
    0.3,              ! Minimum input power fraction for continuous dimming control
    0.2,              ! Minimum light output fraction for continuous dimming control
    0,                ! Number of steps, excluding off, for stepped control
    1.0;              ! Probability electric lighting will be reset when needed (used only
                      !   for stepped control, to simulate manual on/off control)
```

Daylighting Output

Daylighting specific outputs are:

```
Zone,Average,Daylight Illum at Ref Point 1 [lux]
Zone,Average,Glare Index at Ref Point 1 []
Zone,Average,Daylight Illum at Ref Point 2 [lux], if applicable
Zone,Average,Glare Index at Ref Point 2 [], if applicable
Zone,Average,Ltg Power Multiplier from Daylighting []
```

And, of course, any change in Electric/Lights consumption!

Daylight Illum at Ref Point 1 [lux]

The daylight illuminance at the first reference point in a daylit zone.

Daylight Illum at Ref Point 2 [lux]

The daylight illuminance at the second reference point in a daylit zone.

Glare Index at Ref Point 1 []

The daylight glare index at the first reference point in a daylit zone.

Glare Index at Ref Point 2 []

The daylight glare index at the second reference point in a daylit zone.

Ltg Power Multiplier from Daylighting []

The amount by which the overhead electric lighting power in a zone is multiplied due to usage of daylighting to dim or switch electric lights. For example, if the multiplier is *M* and the electric power without dimming is *P*, then the electric power with dimming is *M*P*. The multiplier varies from 0.0, which corresponds to maximum dimming (zero electric lighting), to 1.0, which corresponds to no dimming.

Baseboard Heat

Specifies outside temperature-controlled baseboard heating. The capacities (high and low) are specified in W at the temperatures specified. The schedule allows both capacities to change hourly on a proportional basis. This baseboard heater does not operate if the outdoor dry bulb is above the high temperature limit. Between the high temperature and the low temperature, the capacity is interpolated between the high and the low capacity values. Below the low temperature, the capacity is set at the low capacity value. This allows the user to add baseboard heat to a perimeter zone starting at a prescribed temperature and then slowly increases this capacity to a max value.

Example:

Temperature High = 10 C Capacity High = 100,000 W

Temperature Low = 0 C Capacity Low = 500,000 W

Outdoor Dry Bulb(C)	Baseboard Output
>10	0
10	100,000
8	180,000
6	260,000
4	340,000
2	420,000
0	500,000
< 0	500,000

Field: Zone Name

The name of the zone that this baseboard heater is associated with.

Field: Schedule Name

The schedule that the baseboard heater will be operational.

Field: Low Temperature

If the outdoor dry bulb temperature (degrees Celsius) is at or below the low temperature the baseboard heater operates at the low temperature capacity.

Field: Capacity at Low Temperature

The capacity (Watts) at the low temperature limit.

Field: High Temperature

If the outdoor dry bulb temperature (degrees Celsius) is greater than the high temperature the baseboard heater will not operate.

Field: Capacity at High Temperature

This is the capacity (Watts) at the high temperature limit.

Field: Fraction Radiant

Specifies percentage of hourly total radiated to zone as heat.

```
BASEBOARD HEAT,
       \memo This item has supporting code but has not been tested -- Beta 1.
  A1 , \field Zone Name
       \type object-list
       \object-list ZoneNames
  A2 , \field SCHEDULE Name
       \type object-list
       \object-list ScheduleNames
  N1 , \field Capacity at low temperature
       \type real
       \units W
       \minimum> 0
  N2 , \field Low Temperature
       \units C
       \type real
  N3 , \field Capacity at high temperature
       \type real
       \units W
       \minimum> 0
  N4 , \field High Temperature
       \units C
       \type real
  N5 ; \field Fraction Radiant
       \type real
       \minimum 0.0
       \maximum 1.0
```

Sorry no IDF examples.

Baseboard Heat Output

None yet.

Group – ExteriorEnergyUse Equipment

To facilitate the reporting of exterior consumption (to the building's heat balance/loads considerations), several objects have been included. The consumption related to these items will appear on meters specific to the items.

ExteriorLights

Field: DescriptiveName

This descriptive name allows the values of exterior lights consumption to appear in the "normal" output variable list as well as the meters. It cannot be blank nor can it be duplicated by other ExteriorLights statements.

Field: SCHEDULE Name

A schedule will allow the exterior lights consumption to be operationally different, hour to hour as well as seasonally. Fractional values in the basic schedule will be applied to the design level field below.

Field: Design Level

This field (in Watts) is typically used to represent the maximum electrical input to exterior lighting fixtures that is then multiplied by a schedule fraction (see previous field). In EnergyPlus, this is

slightly more flexible in that the lighting design level could be a "diversity factor" applied to a schedule of real numbers. Note that while the schedule value can vary from hour to hour and seasonally, the design level field is constant for all simulation environments.

```
ExteriorLights,            ! only used for Meter type reporting, does not affect building loads
  A1 , \field DescriptiveName
  A2 , \field SCHEDULE Name
       \type object-list
       \object-list ScheduleNames
  N1 ; \field Design Level
       \units W
       \type real
       \minimum 0
```

An IDF Example:

```
ExteriorLights,OutsideLights,ON,1000;
```

ExteriorLights Output

Output for exterior lights appears in three possible places. It will appear on two meters (Electricity:Facility and ExteriorLights:Electricity) as well as in its own designated value in the standard output file.

```
Zone,Meter,Electricity:Facility [J]
Zone,Meter,ExteriorLights:Electricity [J]
Zone,Sum,Exterior Lights-Electric Consumption [J]
```

ExteriorFuelEquipment

Field: DescriptiveName

This descriptive name allows the values of exterior equipment consumption to appear in the "normal" output variable list as well as the meters. It cannot be blank nor can it be duplicated by other ExteriorFuelEquipment or ExteriorWaterEquipment statements.

Field: FuelUseType

This field designates the appropriate meter for the exterior fuel equipment. Several designations are allowed ("Electricity", "Gas", "Water", "Coal", "FuelOil#1", "PropaneGas", "FuelOil#2"). The fuel type triggers the application of consumption amounts to the appropriate energy meters.

Field: SCHEDULE Name

A schedule will allow the exterior lights consumption to be operationally different, hour to hour as well as seasonally. Fractional values in the basic schedule will be applied to the design level field below.

Field: Design Level

This field (usually Watts, if FuelUseType=Water, then m3/s) is typically used to represent the maximum input to exterior fixtures that is then multiplied by a schedule fraction (see previous field). In EnergyPlus, this is slightly more flexible in that the design level could be a "diversity factor" applied to a schedule of real numbers. Note that while the schedule value can vary from hour to hour and seasonally, the design level field is constant for all simulation environments.

```
ExteriorFuelEquipment,
  A1 , \field DescriptiveName
  A2 , \field FuelUseType
       \type choice
       \key Electricity
       \key Gas
       \key Water
       \key Coal
       \key FuelOil#1
       \key PropaneGas
       \key FuelOil#2
  A3 , \field SCHEDULE Name
       \type object-list
       \object-list ScheduleNames
  N1 ; \field Design Level
       \note if key=Water, units are m3/s
       \units W
       \type real
       \minimum 0
```

IDF Examples:

```
ExteriorFuelEquipment,OutsideGasEq,Gas,ON,1000;
ExteriorFuelEquipment,OutsideCoalEq,Coal,ON,1000;
ExteriorFuelEquipment,OutsideFuelOil1Eq,FuelOil#1,ON,1000;
ExteriorFuelEquipment,OutsideFuelOil2Eq,FuelOil#2,ON,1000;
ExteriorFuelEquipment,OutsideLPGEq,PropaneGas,ON,1000;
ExteriorFuelEquipment,OutsideWater1Eq,Water,ON,1000;
```

ExteriorWaterEquipment

Field: DescriptiveName

This descriptive name allows the values of exterior equipment consumption to appear in the "normal" output variable list as well as the meters. It cannot be blank nor can it be duplicated by other ExteriorFuelEquipment or ExteriorWaterEquipment statements.

Field: FuelUseType

For ExteriorWaterEquipment, only "Water" is current allowed for this field.

Field: SCHEDULE Name

A schedule will allow the exterior water consumption to be operationally different, hour to hour as well as seasonally. Fractional values in the basic schedule will be applied to the design level field below.

Field: Design Level

This field (in m3/s) is typically used to represent the maximum volumetric flow for water fixtures that is then multiplied by a schedule fraction (see previous field). In EnergyPlus, this is slightly more flexible in that the exterior water equipment design level could be a "diversity factor" applied to a schedule of real numbers. Note that while the schedule value can vary from hour to hour and seasonally, the design level field is constant for all simulation environments.

```
ExteriorWaterEquipment,
  A1 , \field DescriptiveName
  A2 , \field FuelUseType
       \type choice
       \key Water
  A3 , \field SCHEDULE Name
       \type object-list
       \object-list ScheduleNames
  N1 ; \field Design Level
       \units m3/s
       \type real
       \minimum 0
```

IDF Example:

```
ExteriorWaterEquipment,OutsideWaterEq,Water,ON,10000;
```

ExteriorFuelEquipment, ExteriorWaterEquipment Outputs

Output for exterior equipment consumption appears in three possible places. It will appear on two meters (<FuelType>:Facility and ExteriorEquipment:<FuelType>) as well as in its own designated value in the standard output file.

```
Zone,Meter,Gas:Facility [J]
Zone,Meter,ExteriorEquipment:Gas [J]
Zone,Sum,ExteriorEq Misc-Gas Consumption [J]
Zone,Meter,Coal:Facility [J]
Zone,Meter,ExteriorEquipment:Coal [J]
Zone,Sum,ExteriorEq Misc-Coal Consumption [J]
Zone,Meter,FuelOil#1:Facility [J]
Zone,Meter,ExteriorEquipment:FuelOil#1 [J]
Zone,Sum,ExteriorEq Misc-FuelOil#1 Consumption [J]
Zone,Meter,FuelOil#2:Facility [J]
Zone,Meter,ExteriorEquipment:FuelOil#2 [J]
Zone,Sum,ExteriorEq Misc-FuelOil#2 Consumption [J]
Zone,Meter,Propane:Facility [J]
Zone,Meter,ExteriorEquipment:Propane [J]
Zone,Sum,ExteriorEq Misc-Propane Consumption [J]
Zone,Meter,Water:Facility [M3]
Zone,Meter,ExteriorEquipment:Water [M3]
Zone,Sum,ExteriorEq Misc-Water Consumption [M3]
```

Group – AirFlow

An important characteristic of energy consumption in buildings is the airflow between zones and due to natural ventilation (e.g. open windows). This group of objects describes those elements.

Infiltration

Infiltration is the unintended flow of air from the outdoor environment directly into a thermal zone. Infiltration is generally caused by the opening and closing of exterior doors, cracks around windows, and even in very small amounts through building elements. The basic equation used to calculate infiltration in EnergyPlus is:

$$Infiltration = \left(I_{design}\right)\left(F_{schedule}\right)\left[A + B\left(T_{zone} - T_{odb}\right) + C\left(WindSpeed\right) + D\left(Windspeed^{2}\right)\right]$$

More advanced infiltration calculations are possible using the EnergyPlus link to the COMIS program. Infiltration described by the equation shown above is entered into EnergyPlus using the following syntax. Exfiltration (the leakage of zone air to the outside) is generally handled better as zone exhaust air in the zone equipment description.

Field: Zone Name

This field is the name of the zone (ref: Zone) and attaches a particular infiltration statement to a thermal zone in the building.

Field: Schedule Name

This field is the name of the schedule (ref: Schedule) that modifies the maximum design volume flow rate parameter (see next field). This fraction between 0.0 and 1.0 is noted as $F_{schedule}$ in the above equation.

Field: Design Volume Flow Rate

This number (noted as I_{design} in the above equation)is the maximum amount of infiltration expected at design conditions. The flow rate is expressed in units of m^3/s. The design value is modified by the schedule fraction (see previous field) and user specified coefficients (see next four fields).

Field: Constant Term Coefficient

This number is the "A" parameter in the above infiltration equation. It is part of the user specified modifying parameters that are a function of environmental factors. This parameter, however, is a constant under all conditions and is not modified by any environmental effect. As a result, it is dimensionless.

Field: Temperature Term Coefficient

This number is the "B" parameter in the above infiltration equation. It is part of the user specified modifying parameters that are a function of environmental factors. This parameter is modified by the temperature difference between the outside and inside air dry bulb temperatures. The units for this parameter are inverse Celsius.

Field: Velocity Term Coefficient

This number is the "C" parameter in the above infiltration equation. It is part of the user specified modifying parameters that are a function of environmental factors. This parameter is modified by the speed of wind being experienced outside the building. The units for this parameter are s/m.

Field: Velocity Squared Term Coefficient

This number is the "D" parameter in the above infiltration equation. It is part of the user specified modifying parameters that are a function of environmental factors. This parameter is modified by square of the speed of wind being experienced outside the building. The units for this parameter are s^2/m^2.

```
INFILTRATION,
       \memo  Infiltration is specified as a design level which is modified by a schedule fraction,
       \memo temperature difference and wind speed:
       \memo  Infiltration=Idesign * Fschedule * (A + B*(Tzone-Todb) + C*WindSpd + D * WindSpd**2)
  A1 , \field Zone Name
       \type object-list
       \object-list ZoneNames
  A2 , \field SCHEDULE Name
       \type object-list
       \object-list ScheduleNames
  N1 , \field Design Volume Flow Rate
       \units m3/Sec
       \note  "Idesign" in Equation
       \type real
  N2 , \field Constant Term Coefficient
       \note  "A" in Equation
       \type real
  N3 , \field Temperature Term Coefficient
       \note  "B" in Equation
       \type real
  N4 , \field Velocity Term Coefficient
       \note  "C" in Equation
       \type real
  N5 ; \field Velocity Squared Term Coefficient
       \note  "D" in Equation
       \type real
```

An IDF example:

```
INFILTRATION, DORM ROOMS AND COMMON AREAS, BLDG Sch   3,  ! Int Gain Type, Zone, and Schedule
   2.831685    ,  ! Design Level {m3/Sec}
  0.6060000    ,  ! Constant Term Coef
  3.6359996E-02,  ! Temp Term Coef
  0.1177165    ,  ! Velocity Term Coef
  0.0000000E+00;  ! Velocity**2 Term Coef
```

Infiltration Output

Current infiltration output values:

```
Zone,Sum,Infiltration-Heat Loss[J]
Zone,Sum,Infiltration-Heat Gain[J]
Zone,Sum,Infiltration-Volume[m3]
Zone,Sum,Infiltration-Mass[kg]
```

Mixing

In EnergyPlus, the Mixing syntax is intended to allow simplified treatment of air exchange between zones. Note that this statement only affects the energy balance of the “receiving” zone and that this statement will not produce any effect on the “source” zone. Mixing statements can be complementary and include multiple zones, but the balancing of flows between zones is left to the user’s discretion. The use of the Cross Mixing syntax (ref: Cross Mixing) can allow for automatic balancing of flows and energy flow rates between zones but is hindered by the limitation of only a single cross mixing statement per zone. Mixing is entered using the following syntax.

Field: Zone Name

This field is the name of the zone (ref: Zone) receiving the amount of air being exchanged and attaches a particular mixing statement to a thermal zone in the building.

Field: Schedule Name

This field is the name of the schedule (ref: Schedule) that modifies the maximum design volume flow rate parameter (see next field). This fraction between 0.0 and 1.0 modifies the design level parameter.

Field: Design Level

This number is the maximum amount of mixing expected. The flow rate is expressed in units of m^3/s. The design value is modified by the schedule fraction (see previous field).

Field: Source Zone Name

This field is the name of the "source" zone (ref: Zone) that exhausts the amount of air specified by the design level and schedule fields to the zone named in the zone name field.

Field: Delta Temperature

This number controls when mixing air from the source zone is sent to the receiving zone. This parameter is a temperature and is expressed in units of Celsius. If this field is positive, the temperature of the zone from which the air is being drawn (source zone) must be "Delta Temperature" warmer than the receiving zone air or else no mixing occurs. If this field is negative, the temperature of the source zone must be "Delta Temperature" cooler than the receiving zone air or else no mixing occurs. If this parameter is zero, mixing occurs regardless of the relative zone temperatures.

```
MIXING,
  A1 , \field Zone Name
       \type object-list
       \object-list ZoneNames
  A2 , \field SCHEDULE Name
       \type object-list
       \object-list ScheduleNames
  N1 , \field Design Level
       \type real
  A3 , \field Source Zone Name
       \type object-list
       \object-list ZoneNames
  N2 ; \field Delta Temperature
       \units C or K ! this is a temperature difference
       \type real
```

Sorry, no IDF examples.

Mixing Output

None yet.

Cross Mixing

The Cross Mixing syntax is ideally suited for two zones that exchange an equal amount of air between each other and do not have any air exchange with other zones. As with Mixing (ref: Mixing), this is a simplified view of interzone airflow in EnergyPlus. The main difference between Mixing and Cross Mixing is that Cross Mixing has an energy effect on both the source and the receiving zone, thus maintaining both the air mass and energy balances in the two zones. Cross Mixing is entered using the following syntax.

Field: Zone Name

This field is the name of the zone (ref: Zone) receiving the amount of air being exchanged and attaches a particular cross mixing statement to a thermal zone in the building.

Field: Schedule Name

This field is the name of the schedule (ref: Schedule) that modifies the maximum design volume flow rate parameter (see next field). This fraction between 0.0 and 1.0 modifies the design level parameter.

Field: Design Level

This number is the maximum amount of mixing expected between the two zones. The flow rate is expressed in units of m^3/s. The design value is modified by the schedule fraction (see previous field).

Field: Source Zone Name

This field is the name of the "source" zone (ref: Zone) that exhausts the amount of air specified by the design level and schedule fields to the zone named in the zone name field. In reality, the "source" and "receiving" zones are interchangeable since the cross-mixed air affects both zones.

Field: Delta Temperature

This number controls when mixing air from the source zone is sent to the receiving zone. This parameter is a temperature and is expressed in units of Celsius. If this field is positive, the temperature of the zone from which air is being drawn ("source zone") must be "Delta Temperature" warmer than the zone air or no mixing occurs. If this field is zero, mixing occurs regardless of the relative air temperatures. Negative values for "Delta Temperature" are not permitted.

```
CROSS MIXING,
  A1 , \field Zone Name
       \type object-list
       \object-list ZoneNames
  A2 , \field SCHEDULE Name
       \type object-list
       \object-list ScheduleNames
  N1 , \field Design Level
       \type real
  A3 , \field Source Zone Name
       \type object-list
       \object-list ZoneNames
  N2 ; \field Delta Temperature
       \units C or K ! this is a temperature difference
       \minimum 0.0  ! must be greater than or equal to zero
       \type real
```

Sorry, no IDF examples.

Cross Mixing Output

None yet.

Overview of the COMIS/EnergyPlus Link

COMIS was originally developed in 1994 as a stand-alone multi-zone airflow program with its own input and output processors. In this implementation into EnergyPlus, the COMIS source code has been modified into ten modules that are called by the EnergyPlus program during each time step. At the beginning of the simulation, the Heat Balance Air Manager module generates an internal COMIS input file (**comistest.cif**) based on the building airflow description described in this section, and the exterior environmental conditions and internal zone temperatures. Comistest.cif can be used as input to the original COMIS program for testing and debugging purposes. COMIS, in turn, returns to the Heat Balance Air Manager the calculated airflows from the outside as infiltration, and from zone to zone as cross-mixing airflows. For each time step, the exterior and interior temperatures are updated, as well as any changes in window and door opening conditions.

The COMIS airflow building description shares many similarities to the building description used for modeling heat transfer. Both treat the building as a collection of zones that are linked to the external environment and other zones by a network of nodes. In the airflow representation,

however, the nodes are the airflow properties rather than the thermal properties of the various building components such as walls, roofs, windows, doors, etc. The following table shows the general parallels between the thermal and airflow representations of a building :

Table 4. Thermal vs. AirFlow representations of a building

	Thermal inputs	**Airflow inputs**
Zone	Thermal Zone	COMIS Zone
Building Component	Wall, Roof or Floor Construction, Window or Door Construction	COMIS Air Flow : Crack, COMIS Air Flow : Opening
Surfaces	Surface: HeatTransfer	COMIS Surface
External Environment	Environmental Data (temperature, humidity, radiation, wind speed and direction, pressure, etc.)	Environmental Data, COMIS External Nodes, COMIS Site Wind Conditions, COMIS Cp Values

A substantial part of the information needed for the airflow modeling already exists and can be extracted or referenced from the building description for the thermal modeling, such as the volume and neutral height of the zones, the orientation and location of the building surfaces, etc. In fact, no additional inputs are needed to define an airflow zone, while a COMIS surface needs only references to the airflow type and the corresponding heat transfer surface. The COMIS model, however, does require substantially more information about the external environment. Whereas the thermal modeling assumes the same external environment for all surfaces (except solar and wind), the airflow modeling requires differing external nodes where the pressure coefficients (Cp) by wind direction may differ.

The following description of the airflow input parameters give only the technical specifications of the COMIS program. More detailed discussions of their use, defaults and suggested values can be found in Feustel, H. and Smith, B. (ed.) 1998. "COMIS 3.0 User's Guide", Lawrence Berkeley National Laboratory, Berkeley CA. This document and other information is available on the LBNL web site: http://epb1.lbl.gov/comis/.

COMIS Simulation

The COMIS Simulation object is used to define the basic run parameters for the COMIS multi-zone airflow calculations.

Field: Ventilation simulation control

This alpha field designates whether airflow calculations using COMVEN will be done during the COMIS simulation. The allowable choices are “VENT” or “NO VENT”. This input is entered under the keyword PR-SIMU (“Problem Simulation”) in the original COMIS program, which permitted the airflow calculation to be skipped. For the EnergyPlus implementation, the input should always be set to “VENT”.

Field: Pollution simulation control

This alpha field designates whether pollutant transport is modeled during the COMIS simulation. The allowable choices are “POL” or “NO POL”. This field is also entered under the keyword PR-SIMU (“Problem Simulation") in the original COMIS program. In the current Beta 4 implementation, the pollutant simulation results from COMIS are not passed to EnergyPlus. Therefore, selection of “POL” will not affect the simulation results except to slow it down. Until the COMIS pollutant simulation is integrated into EnergyPlus, the input should always be set to “NO POL”.

Field: Concentration simulation control

This alpha field designates whether concentrations for specified pollutants are tracked during the COMIS simulation. The allowable choices are “CONC” or “NO CONC”. This field is also entered under the keyword PR-SIMU (“Problem Simulation”) in the original COMIS program. In the current Beta 3 implementation, the pollutant simulation results from COMIS are not passed to EnergyPlus. Therefore, selection of “CONC” will not affect the simulation results except to slow it down. Until the COMIS pollutant simulation is integrated into EnergyPlus, the input should always be set to “NO CONC”.

Field: Under relaxation factor

This numeric field specifies the factor used to multiply the Newton pressure corrections if pure Newton iteration steps are used. This field is input under the keyword PR-CONT (“Problem Control”) in the original COMIS program. The solver used in COMVEN, the airflow simulation model in COMIS, starts first with a number of pure Newton iterations using the specified under relaxation factor. After these iterations, the solver then switches to a solver originally developed by George Walton of NIST for the AIRNET program with fixed relaxation factors. The practical range for this under relaxation factor is from 0.50 to 1.00. The default in the original COMIS program is 1.00.

Field: Absolute flow tolerance

This numeric field specifies the absolute tolerance per flow in kg/s. This field is input under the keyword PR-CONT (“Problem Control”) in the original COMIS program. The default in the original COMIS program is 1.0E-6 kg/s.

Field: Relative flow tolerance

This numeric field specifies the relative tolerance per flow (no units). This field is input under the keyword PR-CONT (“Problem Control") in the original COMIS program. The default in the original COMIS program is 1.0E-5.

Field: Error estimation for total flow per zone

This numeric field specifies the Newton pressure correction multiplied by the derivative d(flowsum per zone)/d(zone pressure) in kg/s. This is an estimation of the error in the sum of the flow per zone. This field is input under the keyword PR-CONT (“Problem Control”) in the original COMIS program. The default in the original COMIS program is 1.0E-4 kg/s.

Field: Start number of iterations

This integer field specifies the number of pure Newton iteration steps done with the previously defined Under Relaxation Factor before switching over to the Walton solver with optimum relaxation. This field is input under the keyword PR-CONT (“Problem Control") in the original COMIS program. The default in the original COMIS program is 1.

Field: Limit for laminar flow approximation

This numeric field specifies the pressure in Pa below which the link airflows are approximated by a linear function. This is necessary to avoid problems in simulating airflow through large openings. This field is input under the keyword PR-CONT (“Problem Control") in the original COMIS program. The default in the original COMIS program is 1.0E-4 Pa.

Field: Flag for using old pressures

This integer field specifies what the COMIS airflow calculations should take as the pressures per zone at each time step. This pressure has some influence on the air density in the zone and thus on the resulting stack effect, especially if the zone reference height is far away from the level of

most links, and if the zone pressures are large. The allowable inputs are 0 for zero pressures, 1 for using old pressures, or 2 for recalculate air density after every iteration step. This field is input under the keyword PR-CONT (“Problem Control”) in the original COMIS program. The default in the original COMIS program is 0.

Field: Flag for pressure initiation

This integer field specifies whether the COMIS airflow calculations should start with a first pressure iteration based on a linear network derived from the input C-values. The allowable inputs are 0 for linear initialization or 1 for no initialization. This field is input under the keyword PR-CONT (“Problem Control") in the original COMIS program. The default in the original COMIS program is 0.

Field: Max number of iterations

This integer field specifies the maximum number of iteration steps for the COMVEN solver to find a solution. If no solution is found when this number is reached, COMIS will return the results from the last iteration step but report that these may be wrong. This field is input under the keyword PR-CONT (“Problem Control") in the original COMIS program. The default in the original COMIS program is 500.

Field: Reference height for recorded wind data

This numeric field specifies the reference height at which the wind speeds in the meteorological data, i.e., weather file, have been measured, in meters. Based on this height, COMIS will develop wind velocity profiles using either the power law or logarithmic profile. This field is input under the keyword ENV-WIN (“Environment Wind”) in the original COMIS program. The default in the original COMIS program is 10 m.

Field: Wind velocity profile exponent

This numeric field specifies the exponent in the power law function of the wind mean velocity profile (no units). This field is input under the keyword ENV-WIN (“Environment Wind”) in the original COMIS program. The default in the original COMIS program is 0.14.

```
COMIS SIMULATION,
      \unique-object
 A1 , \field Ventilation simulation control
      \type choice
      \key VENT
      \key NO VENT
 A2 , \field Pollution simulation control
      \type choice
      \key POL
      \key NO POL
 A3 , \field Concentration simulation control
      \type choice
      \key CONC
      \key NO NOCONC
 N1 , \field Under relaxation factor
      \type real
 N2 , \field Absolute flow tolerance
      \type real
 N3 , \field Relative flow tolerance
      \type real
 N4 , \field Error estimation for total flow per zone
      \type real
 N5 , \field Start number of iterations
      \type integer
      \minimum 1
      \maximum 10
 N6 , \field Limit for laminar flow approximation
      \type real
 N7 , \field Flag for using old pressures
      \type integer
      \minimum 0
      \maximum 2
 N8 , \field Flag for pressure initiation
      \type integer
      \minimum 0
      \maximum 1
 N9 , \field Max number of iterations
      \type integer
      \minimum 1
      \maximum ?
 N10, \field Reference height for recorded wind data
      \type real
 N11; \field Wind velocity profile exponent
     \type real
```

An IDF example:

```
COMIS SIMULATION,         ! COMIS run parameters
  VENT, NO POL, NO CONC,    ! conditions simulated
  1.00, 1.00E-06, 1.00E-04, ! tolerances
  2.00E-07, 1, 1.00E-04,    ! tolerances
  0, 0,                     ! pressure initiations
  500,                      ! max number of iterations
  10.0, 0.14 ;              ! ref. height, velocity profile for recorded wind data
```

COMIS Air Flow: Crack

The COMIS Air Flow: Crack object specifies the airflow properties through a crack. It can be regarded as the airflow properties for a building assembly, e.g., wall type, just as its thermal properties are defined by a corresponding Construction object. The power law form is used in COMIS to express the leakage characteristics of cracks:

$$Q = C_Q (\Delta P)^n$$

where Q = air flow
C_Q = air mass flow coefficient
ΔP = pressure difference
n = air flow exponent

Field: User Supplied airflow data name

This field is a user specified name for the COMIS Air Flow:Crack object that will be used as a reference by the COMIS Surface Data object. This name must be identical to one of the COMIS Surface Data definitions in the input data file, and begin with the two characters 'CR'. In the Beta 4 implementation, the airflow data name cannot be longer than 10 characters in length. This field is input as part of the definition of a Crack component under the keyword NET-AIR ("Network Air Flow") in the original COMIS program

Field: Air mass flow coefficient

This numeric field specifies the air mass flow coefficient of the COMIS Air Flow:Crack object in kg/s@1Pa. This field is input as part of the definition of a Crack component (-CR) under the keyword NET-AIR ("Network Air Flow") in the original COMIS program. The default in the original COMIS program is 0.001 kg/s@1Pa.

Field: Air flow exponent

This numeric field specifies the airflow exponent of the COMIS Air Flow:Crack object. This field is input as part of the definition of a Crack component under the keyword NET-AIR ("Network Air Flow") in the original COMIS program. This exponent should be between 0.50 to 1.00.

Field: Crack length

This numeric field specifies the crack length of the COMIS Air Flow:Crack object in meters. This length is used for describing the flow properties and need not be the actual length of the crack. COMIS derives the air mass flow coefficient (Cm) for a link multiplying the input Air mass flow coefficient (Cs) by the ratio of the actual value given as the Crack Factor of the COMIS Surface Data object and the Crack length:

$$Cm = (\text{Actual Value}/\text{Length}) * Cs$$

This field is input as part of the definition of a Crack component under the keyword Net-AIR ("Network Air Flow") in the original COMIS program. This default in the original COMIS program is 1.0 m.

Field Set – Pollutant Filters

The following three fields are identical in description – just one for each allowable pollution factor.

Field: Pollutant filter 1--3

This numeric field specifies the "filter efficiency" of the COMIS Air Flow:Opening object; this means the fractions of the first of five defined pollutants that will not pass through the link. A filter of 0.3 means that 30% of the pollutant will disappear and 70% will go through the link. This field is input as part of the definition of a window or door component under the keyword NET-AIR ("Network Air Flow") in the original COMIS program. The filter should be between 0.0 and 1.0. Since pollutant transport and dispersion has not been implemented in the Beta 4 COMIS/EnergyPlus link, a 0 should be entered.

```
COMIS AIR FLOW:Crack,
 A1 , \field User Supplied airflow data
      \type alpha
 N1 , \field Air mass flow coefficient
      \type real
 N2 , \field Air flow exponent
      \type real
 N3 , \field Crack length
      \type real
 N4 , \field Pollutant filter 1
      \type real
 N5 , \field Pollutant filter 2
      \type real
 N6 ; \field Pollutant filter 3
      \type real
```

```
COMIS AIR FLOW:CRACK,      ! COMIS crack type
  CR-1, 0.01, 0.667, 1,      ! name, flow, exponent, crack length
  0, 0, 0;                   ! pollutant filters
  COMIS AIR FLOW:CRACK,      ! COMIS crack type
  CRcri, 0.05, 0.667, 1,     ! name, flow, exponent, crack length
  0, 0, 0;                   ! pollutant filters
  COMIS AIR FLOW:CRACK,      ! COMIS crack type
  CRdoor, 0.025, 0.667, 1,   ! name, flow, exponent, crack length
  0, 0, 0;                   ! pollutant filters
```

COMIS Air Flow: Opening

The COMIS Air Flow: Opening object specifies the airflow properties through windows and doors. The required fields are similar to those for the COMIS Air Flow: Crack object, especially when the openings are closed, but additional fields are required to describe the air flow characteristics when the openings are opened, including its opening type, opened dimensions, amount of opening, and schedule for opening.

Field: User Supplied airflow data name

This field is a user specified name for the COMIS Air Flow:Opening object that will be used as a reference by the COMIS Surface Data object. This name must be identical to one of the COMIS Surface Data definitions in the input data file. The input processor will automatically add the two characters 'WI' to the beginning of the name as required by COMIS. In the Beta 4 implementation, the airflow data name cannot be longer than 10 characters in length. This field is input as part of the definition of a window or door component under the keyword NET-AIR ("Network Air Flow") in the original COMIS program.

Field: Flow coefficient for closed window

This numeric field specifies the air mass flow coefficient in kg/s@1Pa when the window or door is closed. This field is input as part of the definition of a window or door component under the keyword NET-AIR ("Network Air Flow") in the original COMIS program. There is no default value for this field in the original COMIS program.

Field: Flow exponent for closed window

This numeric field specifies the airflow exponent of window or door when closed. This field is input as part of the definition of a window or door component under the keyword NET-AIR ("Network Air Flow") in the original COMIS program. There is no default value for this field in the original COMIS program.

Field: Type of large vertical opening

This integer field is a flag for specifying the type of Large Vertical Opening (LVO) for the COMIS Air Flow: Opening object. The allowable inputs are 1 for a rectangular LVO, and 2 for a horizontal pivoting axis LVO. This field is input as part of the definition of a window or door component under the keyword NET-AIR (“Network Air Flow") in the original COMIS program. There is no default value for this field in the original COMIS program.

Field: Extra crack length for LVO type 1 with multiple parts or Height of pivoting axis for LVO type 2

This numeric field is used to specify window characteristics depending on the type of LVO. For Type 1 LVO, i.e., rectangular windows and doors, this field indicates the extra crack length in meters due to having multiple openable parts. For Type 2 LVO, i.e., horizontal pivoting windows, this field gives the height of the pivoting axis measured from the bottom of the window frame, in meters. This field combines two inputs that are part of the definition of a window or door component under the keyword NET-AIR (“Network Air Flow") in the original COMIS program. The default for this field in the original COMIS program is 0.

Field: Number of Opening Factors (Max 4)

This integer field indicates the number of opening factors for which the subsequent fields for discharge coefficient, width factor, height factor, and start height factor have been defined. An opening factor refers to the amount that a window or door is opened and its corresponding airflow characteristics. At least two opening factors need to be defined, which are used for interpolation by COMIS based on the actual amount of opening indicated by the Opening Factor schedule in the COMIS Surface Data object. This field is not specified in the original COMIS program.

Field Set – Opening Factor Data, up to 4 allowed

The following five fields (Opening Factor, Discharge coefficient, Width factor for LVO Type, Height factor for LVO Type, Start Height Factor for LVO Type) are identical in description.

Field: Opening factor 1--4

This numeric field specifies the opening factor of the window. For Type 1 LVO, i.e., rectangular windows, the Opening Factor corresponds to the fraction of window opened. For Type 2 LVO, i.e., horizontal pivoting axis windows, the Opening Factor corresponds to the window opening angle; for example, an Opening Factor 0.50 means an opening angle of 45°. The allowable range of values is from 0.0 to 1.0. This field combines two inputs that are part of the definition of a window or door component under the keyword NET-AIR (“Network Air Flow") in the original COMIS program. There is no default value for this field in the original COMIS program.

Field: Discharge coefficient 1--4

This numeric field specifies the discharge coefficient of the window at the above-specified Opening Factor. The Discharge Coefficient is a number from 0.0 to 1.0 indicating the fractional effectiveness for airflow through a window at that Opening Factor. This field combines two inputs that are part of the definition of a window or door component under the keyword NET-AIR (“Network Air Flow") in the original COMIS program. The default for this field in the original COMIS program is 0.

Field: Width factor for LVO type 1--4

This numeric field specifies the Width Factor of the window at the above-specified Opening Factor. The Width Factor is a number between 0.0 to 1.0 defined as the actual width of the window opening divided by the maximum window width (Actual Lw/Lwmax). This field is input as part of the definition of a window or door component under the keyword NET-AIR (“Network Air Flow") in the original COMIS program. The default for this field in the original COMIS program is 1.0.

Field: Height factor for LVO type 1--4

This numeric field specifies the Height Factor of the window at the above-specified Opening Factor. The Height Factor is a number between 0.0 to 1.0 defined as the actual height of the window opening divided by the maximum window height (Actual Lh/Lhmax). This field is input as part of the definition of a window or door component under the keyword NET-AIR (“Network Air Flow") in the original COMIS program. The default for this field in the original COMIS program is 1.0.

Field: Start height factor for LVO type 1--4

This numeric field specifies the Start Height Factor of the window at the above-specified Opening Factor. The Start Height is the distance between the bottom of the window frame and the bottom of the actual opened part of the window. The sum of the Height Factor and the Start Height Factor must be less than 1.0 in order to have the actual opening within the window frame. This field is input as part of the definition of a window or door component under the keyword NET-AIR (“Network Air Flow") in the original COMIS program. The default for this field in the original COMIS program is 0.0.

Field Set – Pollutant Filters

The following five fields are identical in description – just one for each allowable pollution factor.

Field: Pollutant filter 1--5

This numeric field specifies the “filter efficiency” of the COMIS Air Flow:Opening object; this means the fractions of the first of five defined pollutants that will not pass through the link. A filter of 0.3 means that 30% of the pollutant will disappear and 70% will go through the link. This field is input as part of the definition of a window or door component under the keyword NET-AIR (“Network Air Flow") in the original COMIS program. The filter should be between 0.0 and 1.0. Since pollutant transport and dispersion has not been implemented in the Beta 4 COMIS/EnergyPlus link, a 0 should be entered.

```
COMIS AIR FLOW:Opening,
A1 , \field User Supplied airflow data
\type alpha
N1 , \field Flow coefficient for closed window
\type real
N2 , \field Flow exponent for closed window
\type real
N3 , \field Type of large vertical opening
\type integer
N4 , \field Extra crack length for LVO type 1 with multiple parts or Height of pivoting axis for LVO type
2
\type real
N5 , \field Number of Opening Factors (Max 4)
\type integer
N6 , \field Opening factor  1
\type real
N7 , \field Discharge coefficient
\type real
N8 , \field Width factor for LVO type 1
\type real
 N9 , \field Height factor for LVO type 1
      \type real
 N10, \field Start height factor for LVO type 1
      \type real
```

```
N11, \field Opening factor 2
     \type real
N12, \field Discharge coefficient
     \type real
N13, \field Width factor for LVO type 1
     \type real
N14, \field Height factor for LVO type 1
     \type real
N15, \field Start height factor for LVO type 1
     \type real
N16, \field Opening factor 3
     \type real
N17, \field Discharge coefficient
     \type real
N18, \field Width factor for LVO type 1
     \type real
N19, \field Height factor for LVO type 1
     \type real
N20, \field Start height factor for LVO type 1
     \type real
N21, \field Opening factor 4
     \type real
N22, \field Discharge coefficient
     \type real
N23, \field Width factor for LVO type 1
     \type real
N24, \field Height factor for LVO type 1
     \type real
N25, \field Start height factor for LVO type 1
     \type real
N26, \field Pollutant filter 1
     \type real
N27, \field Pollutant filter 2
     \type real
N28, \field Pollutant filter 3
     \type real
N29, \field Pollutant filter 4
     \type real
N30; \field Pollutant filter 5
     \type real
```

An IDF example:

```
COMIS AIR FLOW:OPENING,    ! COMIS opening type
WI-1, 0.001, 0.667, 1,     ! name, flow, exponent, type of opening,
0, 2,                      ! crack length or pivot axis, no. of opening factors.
0.0, 0.5,0,1.0, ,          ! opening factor 1
1.0, 0.6,1.0,1.0, ,        ! opening factor 2
, , , , ,                  ! opening factor 3
, , , , ,                  ! opening factor 4
0, 0, 0, 0, 0;             ! pollutant filters

COMIS AIR FLOW:OPENING,    ! COMIS opening type
WI-2, 0.001, 0.667, 1,     ! name, flow, exponent, type of opening,
0, 2,                      ! crack length or pivot axis, no. of opening factors.
0.0, 0.5,0.0,1.0, ,        ! opening factor 1
1.0, 0.6,1.0,1.0, ,        ! opening factor 2
, , , , ,                  ! opening factor 3
, , , , ,                  ! opening factor 4
0, 0, 0, 0, 0;             ! pollutant filters
```

COMIS Surface Data

The COMIS Surface Data object specifies the properties of an airflow node.

Field: Surface Name (points to surface)

This alpha field is the user-specified name for the corresponding Surface:HeatTransfer object. This name is used to identify the correspond heat transfer surface, i.e., wall, roof, window, or door, and

extract from the descriptions of that surface object the zone to which the air flow node, i.e., COMIS Surface Data, belongs, the other side zone for internal nodes, as well as the dimensions, location, and placement of the COMIS Surface Data object. This field obviously does not appear in the original COMIS program.

Field: COMIS Air Flow Crack or Opening Type

This alpha field is the user-specified name for the COMIS Air Flow:Crack or AirFlow: Opening object associated with the COMIS Surface Data object. This field is input under the keyword NET-LIN (“Network Links") in the original COMIS program.

Field: COMIS External Node

This integer field specifies the number of the COMIS External Node object associated with the COMIS Surface Data object. This field is input as the "From" node under the keyword NET-LIN (“Network Links”) in the original COMIS program.

Field: COMIS Crack Factor or Window Vent Factor

This numeric field specifies the Actual Value for cracks or the Opening Factor for windows and doors. This field is input as the "Factor/Actual RPM/Value" under the keyword NET-LIN (“Network Links”) in the original COMIS program.

The complete IDD specification follows:

```
COMIS Surface Data,
  A1, \field Surface Name (points to surface)
      \type object-list
      \object-list SurfaceNames
  A2, \field Air Flow Crack or Opening Type
      \type object-list
      \object-list AirFlowCrackNames
      \object-list OpeningTypeNames
  N1, \field External Node
      \type integer
  N2; \field Crack Actual Value or Window Open Factor for Ventilation
      \type real
      \units dimensionless
```

IDF Examples:

```
COMIS SURFACE DATA,
    Surface_1,
    CR-1, ! COMIS Air Flow Crack Type
    3,    ! COMIS External Node Number
    1;    ! COMIS Crack Factor

COMIS SURFACE DATA,
   Window1,
   WI-1,     ! COMIS Air Flow Opening Type
   3,        ! COMIS External Node Number
   0.5;      ! COMIS Window Opening Factor

COMIS SURFACE DATA,
    Surface_2,
    CR-1, ! COMIS Air Flow Crack Type
    4,    ! COMIS External Node Number
    1;    ! COMIS Crack Factor

COMIS SURFACE DATA,
    Surface_3,
    CRcri, ! COMIS Air Flow Crack Type
    ,      ! COMIS External Node Number
    1;     ! COMIS Crack Factor
```

COMIS Zone Data

The COMIS Zone Data object specifies the properties of an air flow zone.

Field: Zone Name (points to zone)

This alpha field is the user-specified name for the EnergyPlus zone object corresponding to the COMIS zone. This field is input under the keyword NET-ZONes in the original COMIS program.

Field: Vent Temperature Schedule

This alpha field contains the schedule name for window operations to provide natural ventilation. This schedule consists of weeks and days, with the days containing the ventilation temperature setting in ºC for each hour of the day. This ventilation temperature indicates the temperature above which all the windows in the zone will be opened if the conditions described under the following Ventilation Mode are met. This window control logic does not exist in the original COMIS program.

Field: Ventilation Mode

This alpha field defines the ventilation control logic under which natural ventilation is permitted. There are two possible ventilation modes where ventilation is allowed if the following conditions are met : (1) TEMPERATURE, if the indoor temperature exceeds the outdoor temperature and (2) ENTHALPIC, if the indoor enthalpy exceeds the outdoor enthalpy. Under either mode, the indoor temperature must also be higher than the ventilation temperature defined in the previous field.

```
COMIS Zone Data,
  A1, \field Zone Name (points to Zone)
      \type object-list
      \object-list ZoneNames
  A2, \field Vent Temperature Schedule
      \type object-list
      \object-list ScheduleNames
  A3; \field Ventilation Mode
      \type choice
      \key TEMPERATURE
      \key ENTHALPIC
```

IDF Examples:

```
COMIS ZONE DATA,
    WEST_ZONE,
    WindowVentSched,  !
    Temperature;      ! venting based on inside/outside temperature differences
```

COMIS Site Wind Conditions

The site wind conditions define the characteristics of the wind field near the building site for a given wind direction. A different site wind condition should be defined for each wind direction angle.

Field: Wind direction angle

This numeric field specifies the wind direction angle corresponding to the environmental parameters specified in the following three fields. The wind direction angle is measured clockwise from geographic north, and range from 0 to 360. This field is input under the keyword ENV-WIN (“Environment Wind”) in the original COMIS program. The default in the original COMIS program is 0, i.e., directly north.

Field: Plan area density

This numeric field specifies the obstruction density of surrounding buildings over a reference area surrounding the building extending out a radius of 10 to 25 times the building height. Plan area densities range from 0.0 to 0.50. The default in the original COMIS program is 0.0, i.e., an open field. This field is input under the keyword ENV-WIN (“Environment Wind”) in the original COMIS program. The default in the original COMIS program is 0.

Field: Wind velocity profile exponent

This numeric field refers to the power law function used to derive the wind mean velocity profile. Reference values are 0.10 for a level surface with very small obstructions, 0.22 for rolling grassland broken by numerous obstructions such as trees or small houses, and 0.32 for heterogeneous surface with structures larger than one story. This field is input under the keyword ENV-WIN ("Environment Wind") in the original COMIS program. The default in the original COMIS program is 0.18.

Field: Surrounding building height

This numeric field specifies the average eave height of the surrounding buildings. If the Plan Area Density is 0, the Surrounding Building Height should be taken as the height of the building itself. This field is input under the keyword ENV-WIN ("Environment Wind") in the original COMIS program. The default in the original COMIS program is 0.

```
COMIS SITE WIND CONDITIONS,
N1 ,  \field Wind direction angle
      \type integer
      \units degree
N2 ,  \field Plan area density
      \type real
N3 ,  \field Wind velocity profile exponent
      \type real
N4;   \field Surrounding building height
      \type real
```

IDF Examples:

```
  COMIS SITE WIND CONDITIONS, ! site conditions for wind dir. 0
  0, 0.20, 0.18, 0.0 ;

  COMIS SITE WIND CONDITIONS, ! site conditions for wind dir. 180
  180, 0.20, 0.32, 15.0 ;
```

COMIS External Node

External nodes in COMIS define environmental conditions outside of the building. However, whereas environmental conditions are generally building-independent in thermal modeling, in COMIS they include wind pressure data that are highly dependent on the building geometry and are linked to the various building facades. This field is input under the keyword NET-EX ("External Node Data") in the original COMIS program

Field: Facade element number

This integer field specifies both the External Node Number and the Facade Element Number that will be used as a reference to the Pressure Coefficients (COMIS Cp Values object) defined elsewhere in the COMIS inputs.

Field: Outside concentration factor

This numeric field specifies the factor of outside pollutant concentration at the External Node in relation to the outdoor pollutant concentration data defined elsewhere in the COMIS inputs. The default in the original COMIS inputs is 1.0. Since pollutant transport and dispersion has not been implemented in the Beta 4 COMIS/EnergyPlus link, a 0 should be entered.

```
COMIS EXTERNAL NODE,
 N1 , \field Facade element number
      \type integer
 N2 ; \field Outside concentration factor
      \type real
```

IDF Example:

```
  COMIS EXTERNAL NODE , !
  1, 1.0  ;             ! node number & outside concentration factor
  COMIS EXTERNAL NODE , !
  2, 1.0  ;             ! node number & outside concentration factor
  COMIS EXTERNAL NODE , !
  3, 1.0  ;             ! node number & outside concentration factor
```

COMIS Standard Conditions for Crack Data

This input is used to normalize measured crack data for the temperature, pressure, and humidity under which the data was collected. If the crack characteristics are based on estimated engineering values and not actual measured data, the default values indicated below should be entered. The following fields are input under the keyword NORMCR ("Standard Conditions for Crack Data") in the original COMIS program.

Field: Standard temperature for crack data

This numeric field specifies the standard temperature in °C under which the Crack Data was obtained. The default for this field in the original COMIS program is 20 °C.

Field: Standard barometric pressure for crack data

This numeric field specifies the standard barometric pressure in kPa under which the Crack Data was obtained. The default for this field in the original COMIS program is 101.325 kPa.

Field: Standard humidity for crack data

This numeric field specifies the standard humidity ratio in g/kg under which the Crack Data was obtained. The default for this field in the original COMIS program is 0 g/kg.

```
COMIS STANDARD CONDITIONS FOR CRACK DATA,
      \unique-object
N1 ,  \field Standard temperature for crack data
      \type real
N2 ,  \field Standard barometric pressure for crack data
      \type real
N3 ;  \field Standard humidity for crack data
      \type real
      \units g/kg
```

IDF Example:

```
  COMIS STANDARD CONDITIONS FOR CRACK DATA, ! assume typical conditions
  20, 101.32, 5;                     ! temp, pressure, humidity (g/kg)
```

COMIS CP ARRAY

In the original COMIS program, the Cp Values are input as a two-dimensional array under the keyword CP-VALU ("Cp Values"). In the COMIS/EnergyPlus implementation, the reference height and wind directions are first specified under the unique COMIS Cp Array object, which are then referenced by COMIS Cp Value objects defined for each Facade Element.

Field: Reference height for CP data

This numeric field specifies the building reference height in meters assumed in the Cp values shown in the COMIS Cp Value objects. The allowable input for the reference height is any real number greater than 0. This field is defined under the keyword CP-BUIL ("Cp - building reference height for Cp data") in the original COMIS program. The default in the original COMIS program is 10 m.

Field: Number of different wind directions (Max 20)

This integer field specifies the number of wind directions for which there are Cp values specified in the COMIS Cp Value objects. The allowable value for this field is a number up to 20. This field is not specified in the original COMIS program.

Field: Wind direction list up to previous field limits

This integer field specifies the wind direction angle corresponding to the Cp values defined in the COMIS Cp Value objects. The wind direction angle is measured clockwise from geographic north, and range from 0 to 360. The list of wind direction angles are listed in the first data line of the two-dimensional array defined under the keyword CP-VALU ("Cp Values") in the original COMIS program.

```
COMIS CP ARRAY,
      \unique-object
 N1 , \field Reference height for CP data
      \type real
      \minimum 0
      \maximum 100
 N2 , \field Number of different wind directions (Max 20)
      \type integer
      \memo Succeeding fields are the wind directions
 N3 , \field Wind direction 1
      \type real
      \units deg
 N4 , \field Wind direction 2
      \type real
      \units deg
--reduced for brevity --
N22; \field Wind direction 20
      \type real
      \units deg
```

IDF Example:

```
  COMIS CP ARRAY,
  10.0,  1,              ! reference height, number of wind directions
  0;                        ! wind direction list (up to 20 allowed)0
```

COMIS CP VALUES

This object specifies the Pressure Coefficients (Cp) of a façade element for the wind direction angles defined in the COMIS Cp Array unique object. These Cp values and their corresponding Facade Element are listed starting with the second data line of the two-dimensional array defined under the keyword CP-VALU ("Cp Values") in the original COMIS program.

Field: Facade element number

This integer field specifies the External Node or Facade Element number corresponding to the Cp Values given in the following fields. The External Node or Facade Element number must refer to the correct External Node defined previously for a COMIS External Node object.

Field: Wind direction list number

This integer field specifies the number of wind directions for which Cp values will be given in the subsequent fields. This number has to be the same as the number entered for the field "Number of different wind directions" in the COMIS Cp Array object. The allowable values for this field are any number from 1 to 20.

Field: CP value by wind direction angle up to previous field limit

These numeric fields up to 20 specifies the Pressure Coefficients (Cp) for the specified External Node or Facade Element number for the list of wind direction angles given in the fields for wind direction in the COMIS Cp Array object. The allowable values for the Cp Values can be either a positive or a negative real number.

```
COMIS CP VALUES,
  \memo  Cp values must correspond to number of wind directions
 N1 , \field Facade element number
      \type integer
 N2 , \field Wind direction list number
      \type integer
 N3 , \field Cp value 1
      \type real
 N4 , \field Cp value 2
      \type real
--reduced for brevity --
 N22; \field Cp value 20
      \type real
```

IDF Example:

```
  COMIS CP VALUES,
  1, 1,                   ! ext. node number, wind dir. list number
  1.00;                  ! Cp value by wind direction list
  COMIS CP VALUES,
  2, 1,                   ! ext. node number, wind dir. list number
  0.25;                  ! Cp value by wind direction list
  COMIS CP VALUES,
  3, 1,                   ! ext. node number, wind dir. list number
  -0.50;                 ! Cp value by wind direction list
```

Group – Design Objects

Zone Sizing

The Zone Sizing object contains the input needed to perform a zone design air flow calculation for a single zone. The information needed consists of the outside environmental conditions and the supply air conditions. The outside conditions are specified by giving the name of a cooling design day (for the cooling design air flow calculation) and a heating design day (for the heating design air flow calculation). There can be only one cooling and one heating design day for each Zone Sizing object. However different Zone Sizing objects (and thus different zones) can use different design days. Supply air conditions are given by specifying a temperature and a humidity ratio for the cooling design calculation and for the heating design calculation.

Field: Name of a zone

The name of the Zone corresponding to this Zone Sizing object. This is the zone for which the design air flow calculation will be made using the input data of this Zone Sizing Object.

Field: name of a cooling design day

The name of a DesignDay object. The zone will be simulated for this design day to obtain the zone cooling design air flow rate.

Field: name of a heating design day

The name of a DesignDay object. The zone will be simulated for this design day to obtain the zone heating design air flow rate.

Field: Zone cooling design supply air temperature

The supply air temperature in degrees Celsius for the zone cooling design air flow rate calculation. Air is supplied to the zone at this temperature during the cooling design day simulation, The zone load is met by varying the zone air flow rate. The maximum zone flow rate is saved as the zone cooling design air flow rate.

Field: Zone heating design supply air temperature

The supply air temperature in degrees Celsius for the zone heating design air flow rate calculation. Air is supplied to the zone at this temperature during the heating design day simulation, The zone load is met by varying the zone air flow rate. The maximum zone flow rate is saved as the zone heating design air flow rate.

Field: Zone cooling design supply air humidity ratio

The humidity ratio in kilograms of water per kilogram of dry air of the supply air in the zone cooling design air flow rate calculation.

Field: Zone heating design supply air humidity ratio

The humidity ratio in kilograms of water per kilogram of dry air of the supply air in the zone heating design air flow rate calculation.

The full IDD specification follows:

```
ZONE SIZING,
  A1, \field Name of a zone
  A2, \field name of a cooling design day
      \type alpha
  A3, \field name of a heating design day
      \type alpha
  N1, \field Zone cooling design supply air temperature
      \type real
      \units C
  N2, \field Zone heating design supply air temperature
      \type real
      \units C
  N3, \field Zone cooling design supply air humidity ratio
      \type real
      \units kg-H20/kg-air
  N4; \field Zone heating design supply air humidity ratio
      \type real
      \units kg-H2O/kg-air
```

An IDF example:

```
Zone Sizing,
   EAST ZONE, ! zone name
   CHANUTE AFB ILLINOIS SUMMER, ! cooling design day name
   CHANUTE AFB ILLINOIS WINTER, ! heating design day name
   13.,   ! cooling supply air temperature
   50.,   ! heating supply air temperature
   0.009, ! cooling humidity ratio
   0.004; ! heating humidity ratio
```

Zone Sizing Outputs

The zone design air flow rates are output on a comma separated file *eplusout.zsz*. The columns are clearly labeled. It will easily import into Excel or other spreadsheet program that accepts comma-delimited files. (Note that the "hour" column is presented in decimal portions of an hour -- .17 is really 10 minutes, 1.25 is 1:15).

System Sizing

The System Sizing object contains the input needed to perform a central forced air system design air flow, heating capacity, and cooling capacity calculation for a system serving one or more zones. The information needed consists of the outside environmental conditions and the design supply air temperatures, outside air flow rate, and minimum system air flow ratio.

The outside conditions are specified by giving the name of a cooling design day (for the cooling air flow and cooling capacity calculation) and a heating design day (for the hot air supply air flow and heating capacity in a dual duct system). There can be only one cooling and one heating design day for each System Sizing object. However different System Sizing objects (and thus different systems) can use different design days.

Supply air conditions are specified by inputting a supply air temperature for cooling, a supply air temperature for heating, and a preheat temperature.

The system sizing calculation sums the zone design air flow rates to obtain a system supply air flow rate. The design conditions and the outside air flow rate are used to calculate a design mixed air temperature. The temperature plus the design supply air temperatures allows the calculation of system design heating and cooling capacities.

Field: name of an AIR PRIMARY LOOP object

The name of the Air Primary Loop corresponding to this System Sizing object. This is the air system for which the design calculation will be made using the input data of this System Sizing Object.

Field: name of a heating design day

The name of a DesignDay object. The system will be simulated for this design day to obtain a design mixed air temperature for heating. This is then used to calculate a system heating capacity.

Field: name of a cooling design day

The name of a DesignDay object. The system will be simulated for this design day to obtain a design mixed air temperature for cooling. This is then used to calculate a system cooling capacity.

Field: type of load to size on

The user specified type of load on which to size the central system. The choices are *sensible*, *latent*, or *total*. Only *sensible* is operational.

Field: Design (minimum) outside air volumetric flow rate

The design outside air flow rate in cubic meters per second. Generally this should be the minimum outside air flow. It is used for both heating and cooling design calculations. The assumption for cooling is that any outside air economizer will be closed.

Field: minimum system air flow ratio

The design minimum central air flow ratio. This ratio is the minimum system air flow rate divided by the maximum system air flow rate. The value must be between 0 and 1. Fir constant volume systems the ratio should be set to 1.

Field: Preheat design set temperature

The design air temperature exiting the preheat coil (if any) in degrees Celsius.

Field: Central cooling design supply air temperature

The design supply air temperature for cooling in degrees Celsius.

Field: Central heating design supply air temperature

The design supply air temperature for heating in degrees Celsius. This can be either the reset temperature for a single duct system or the actual hot duct supply air temperature for dual duct systems.

The full IDD specification follows.

```
SYSTEM SIZING,
  A1, \field name of an AIR PRIMARY LOOP object
      \type alpha
  A2, \field name of a heating design day
      \type alpha
  A3, \field name of a cooling design day
      \type alpha
  A4, \field type of load to size on
      \type choice
      \key sensible
      \key latent
      \key total
  N1, \field Design (minimum) outside air volumetric flow rate
      \type real
      \units m3/s
  N2, \field minimum system air flow ratio
      \type real
      \minimum 0.0
      \maximum 1.0
  N3, \field Preheat design set temperature
      \type real
      \units C
  N4, \field Central cooling design supply air temperature
      \type real
      \units C
  N5; \field Central heating design supply air temperature
      \type real
      \units C
```

An IDF example:

```
System Sizing,
   Typical Terminal Reheat 1, ! system name
   CHANUTE AFB ILLINOIS SUMMER, ! cooling design day name
   CHANUTE AFB ILLINOIS WINTER, ! heating design day name
   sensible, ! load type to size on
   0.4333,   ! minimum outside air flow rate in m3/s
   1.0,      ! minimum system flow ratio (this is a constant volume system)
   7.0,      ! preheat temperature in C
   13.0,     ! cooling supply air temperature in C
   16.0;     ! heating supply air temperature in C
```

System Sizing Outputs

The system design air flow rates and heating and cooling capacities are output on a comma separated file *eplusout.ssz*. The columns are clearly labeled. It will easily import into Excel or other spreadsheet program that accepts comma-delimited files. (Note that the “hour” column is presented in decimal portions of an hour -- .17 is really 10 minutes, 1.25 is 1:15).

HVAC: Primary and Secondary Systems

The HVAC and equipment section of the EnergyPlus input data dictionary and input data file are slightly more complex than the description of building geometry, internal gains, etc. because of the interconnections of the various parts of an HVAC system. In EnergyPlus, there are several portions to the HVAC simulation. All of these parts must be correctly specified in order to arrive at a valid simulation model. The goal of this section is to provide the interface developer with guidelines on what input is expected and also provide some background on basic EnergyPlus simulation methodology.

An EnergyPlus HVAC simulation consists of various components that are connected physically in the actual system by ducts, piping, etc. Every component in an HVAC system must have an inlet and outlet “node”. In the actual system, a node might be a point in the system at which fluid properties can be measured. In an EnergyPlus simulation, the nodes are points at which fluid properties are evaluated and passed on to subsequent equipment.

Components are linked together to form various loops within the simulation. Thus, the output node from one component also serves as the inlet node to the next component. Loops are constructed by defining these loops and also defining the components on the loops. The figure below shows a generic example of the loop-node concept.

Loop nodes are a key defining feature in EnergyPlus. As a result, it is recommended that one of the first steps taken in defining an HVAC system in EnergyPlus be the definition of a node diagram or map. This is helpful for visualization of the entire system. Such a map could be created electronically within an interface or could be kept in the background out of the sight of the user.

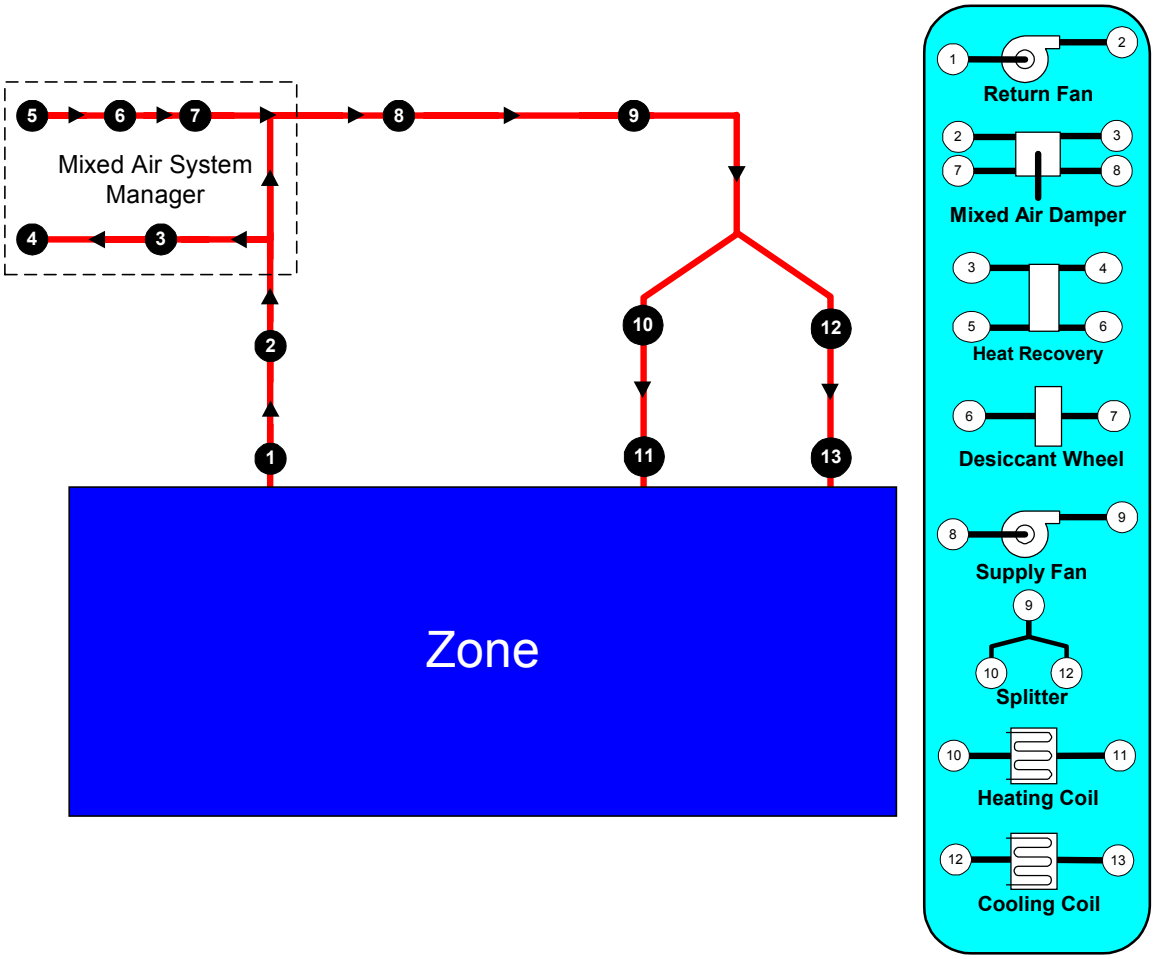

Figure 16. Example Node Diagram

So that these loops are manageable and more clearly defined both in the input and in the simulation, six different loop sections can be defined in an EnergyPlus input file. In general, these six types are in essence three pairs of loop sections that make up three distinct loops: a zone/air loop, a plant loop, and a condenser loop. The six loop section types are defined below.

Air Loop: The air loop is defined by the section of the zone/air loop that starts after the zone return streams are combined and continues on until just before any air stream(s) are branched off to individual zones. The starting point of the air loop is fairly straightforward. The ending point is slightly more complex but can be understood with some examples. For instance, in a terminal reheat system, the end of the air loop would typically be considered the node following the cooling coil. In a dual duct system, the air loop would have two ending points that would correspond to the nodes after the cooling coil and after the heating coil/humidifier. In most cases, the air loop has a single starting point and up to three ending points (for a 3 deck system).

Zone Equipment: The zone equipment section of the input file is defined as more or less the rest of the zone/air loop (outside air is handled separately as a subset of the air loop). This includes everything from where the ducts are split to serve various zones up through where the return ducts from various zones are mixed into a single return duct. Zone equipment can include dampers and reheat coils as well as zone specific conditioning systems such as thermostatic baseboard or a window air conditioner. Most control issues are typically dealt with in the zone equipment section of the simulation.

Plant Loop Demand Side: One side of the plant is where energy is "demanded" by various components that make up the air loop or zone equipment. Typically, this is the water side of equipment such as coils, baseboard, radiant heating and cooling, etc. The demand side of this loop can also include mixers, flow splitters, and a bypass.

Plant Loop Supply Side: The other side of the plant loop is where energy is "supplied" by various components. The components typically found on the supply side include pumps, boilers, chillers, purchased heating and cooling, ice storage, etc. As with the demand side, this loop can also include mixers, flow splitters, and a bypass.

Condenser Loop Demand Side: The condenser loop demand side is analogous to the plant loop demand side. In fact, much of the code and structures are similar. In the case of the condenser loop, energy is typically "demanded" by a chiller condenser. Note that coils, radiant systems, etc. could also be a part of the demand side in the case of free cooling chillers, well water condensers, ground loops, etc.

Condenser Loop Supply Side: This side of the condenser loop consists of the cooling tower, well water, etc. type components. It supplies (rejects) energy that would then be used at the chiller condensers on the other side of the loop.

The section of the input file for describing the HVAC system tends to follow this structure presented above. Both plant and condenser loops are defined with a master description and then branch off into supply and demand side details. Linkage between the two sides is done using node numbers in the master statement. The air loop and zone equipment descriptions are slightly more complex due to the wide range of potential systems that are anticipated. Note that in every section controls become a key element and must be addressed. Each of the following sections details either a loop, a portion of a loop, or controls.

Group – Node-Branch Management

Nodes, **Branch Lists** and **Branches** define the topography of the HVAC connections.

Node List

For convenience, the NODE LIST statement can be used to identify all the nodes before use. It is not required for this purpose. The advantage of listing all the nodes in this manner would allow any "node" output variables to be grouped according to user wishes.

There are other lines of input syntax that require the use of a NODE LIST as part of the input. These syntax items include: OUTSIDE AIR INLET NODE LIST and the SET POINT MANAGER statements. In these two cases, the use of a NODE LIST statement is mandatory if there is more than one node in this particular "list". For example, if the outside air only has a single inlet node, then the name of that node can replace the node list name in the input syntax. As a result of this mandatory specification of node lists for certain types of input, nodes can, obviously, and may be members of more than one list.

Field: Node List Name

This alpha designation must be unique among all the Node List Names. It is used as reference in various objects (e.g. OUTSIDE AIR INLET NODE LIST).

Field: Node_ID (up to 25 allowed)

Each unique Node identifier creates a Node structure with various attributes depending on the type of node. Typical values include Temperature, Mass Flow Rate, and Temperature Set Point. The alpha designators are associated with a particular node.

```
NODE LIST,
  A1 , \field Node List Name
       \type alpha
  A2 , \field Node_ID_1
       \type alpha
  A3 , \field Node_ID_2
       \type alpha
  A4 , \field Node_ID_3
       \type alpha
-- etc to 25 Node Ids per Node List
```

Though each NODE LIST is limited to 25 nodes, several node lists may be entered if you choose to identify all the nodes up front. For example:

```
NODE LIST, Nodes1-25,
NODE_1,NODE_2,NODE_3,NODE_4,NODE_5,NODE_6,NODE_7,NODE_8,NODE_9,NODE_10,
NODE_11,NODE_12,NODE_13,NODE_14,NODE_15,NODE_16,NODE_17,NODE_18,NODE_19,NODE_20,
NODE_21,NODE_22,NODE_23,NODE_24,NODE_25;
NODE LIST, Nodes26-49,NODE_26,NODE_27,NODE_28,NODE_29,NODE_30,
NODE_31,NODE_32,NODE_33,NODE_34,NODE_35,NODE_36,NODE_37,NODE_38,NODE_39,NODE_40,
NODE_41,NODE_42,NODE_43,NODE_44,NODE_45,NODE_46,NODE_47,NODE_48,NODE_49;
```

Node List Output

A simple detail of Nodes and numbers assigned appears in the eplusout.eio file:

```
! <NodeNumber>,<Node Name>
 1,ZONE 1 REHEAT AIR OUTLET NODE
 2,ZONE 2 REHEAT AIR OUTLET NODE
 3,ZONE 3 REHEAT AIR OUTLET NODE
 4,AIR LOOP OUTLET NODE
 5,AIR LOOP INLET NODE
 6,RETURN AIR MIXER OUTLET
 7,ZONE EQUIPMENT INLET NODE
 8,COOLING COIL AIR INLET NODE
 9,CW DEMAND INLET NODE
 10,CW DEMAND ENTRANCE PIPE OUTLET NODE
…
```

In addition, properties of each node is available during the simulation:

```
HVAC,Average,System Node Temp[C]
HVAC,Average,System Node MassFlowRate[kg/s]
HVAC,Average,System Node Humidity Ratio
```

Branch List

A branch list is intended to define the branches or portions of a particular loop that are present on an individual loop such as a plant or condenser loop. Thus, the BRANCH LIST syntax simply provides a list of branch names (see BRANCH syntax) that then refer to more detailed syntax in another part of the input file. The syntax for describing a list of branches is given below.

```
BRANCH LIST,
 \memo list must be in simulation and connection order
   A1, \field Branch List Name
       \reference BranchLists
   A2, \field Branch Name 1
       \type object-list
       \object-list Branches
   A3, \field Branch Name 2
       \type object-list
       \object-list Branches
   A4, \field Branch Name 3
       \type object-list
       \object-list Branches
. . . . . etc
   A50, \field Branch Name 49
        \type object-list
        \object-list Branches
   A51; \field Branch Name 50
        \type object-list
        \object-list Branches
```

Each branch description begins with an identifying name and is followed by a list of up to 50 branch names. These names refer to the BRANCH syntax described in the next section of this document.

An example of this statement in an IDF is:

```
BRANCH LIST, Cooling Supply Side Branches,
        CW Pump Branch,
        Little Chiller Branch,
        Big Chiller Branch,
        Purchased Cooling Branch,
        Supply Bypass Branch,
        Cooling Supply Outlet;
```

Branch List Output

No output directly related to Branch Lists current is presented.

Branch

Branches can be considered the mid-level grouping of items in the EnergyPlus HVAC loop scheme. Components are the lowest level of information. A collection of components in series forms a branch. Every branch must have at least one component, but it may have several components in series. The **branch** defines the order that components appear on the branch. Moreover, a collection of branches and their connecting information form a loop. Therefore, a branch is a collection of components while a loop is a collection of branches. Thus, components are specified for particular HVAC loops by assigning them to branches and then connecting those branches together to form a loop. It should be noted that each component also has at least two nodes associated with it—an inlet node and an outlet node. These nodes, by default, are also part of the branch to which their components are assigned. It should be noted that each branch must have at least one component on it. A “null” branch such as one where the first component on the loop is in reality a splitter or mixer should be defined as a single PIPE component.

Field: Branch Name

This alpha field is the identifying name that allows the branch to be referenced by other elements such as the PLANT LOOP and CONDENSER LOOP statements.

Field: Maximum Branch Flow Rate

This field is the maximum flow rate (m^3/sec) allowed on a particular branch. This number will set an absolute maximum flow rate for all components on the loop. Even if components are defined with a higher flow rate, EnergyPlus will limit the flow on this particular branch to the value entered here by the user.

Field Set (Branch Specifications) – up to 11 allowed

Following the two introductory items, there are up to eleven groups of 5 repeated items: a type, a name, inlet and outlet node names, and a branch control type. All of these items refer to a particular component on the branch. The first component defined by these items will be the first component on this branch, etc. through the end of the list.

Field: Comp Type

This field is the component type. The component type refers to other elements within the input file and specifies what kind of component this is. The objects in the "Group – Plant-Condenser Equipment" section are valid here when the Branch is used in Plant specifications. Fans, coils and Outside Air Systems are also valid component types for the Branch object. Pipes are also valid for this field.

Field: Comp Name

The component name is a reference name to distinguish between potentially multiple occurrences of a particular component type in an input file. The set of component type and component name must be unique. (You can only have 1 BOILER:SIMPLE with name MYBOILER).

Field: Comp Inlet Node Name

This field references an inlet node name that will be found in the actual component specification.

Field: Comp Outlet Node Name

This field references an outlet node name that will be found in the actual component specification.

Field: Comp Branch Control Type

The final item in each field-set is the component flow control and how this component relates to the overall flow of the branch. If the field value is **ACTIVE**, then this component will try to control the flow through this branch within the limits of the other components on the branch. A **PASSIVE** component will simply take whatever amount of flow has been passed to it. The **BYPASS** designation should only be used for a branch that has a single component (usually a PIPE). A bypass is used to handle excess flow when a pump or fan cannot throttle down to send only the amount of flow requested by other components on the loop.

```
BRANCH,
   A1,  \field Branch Name
        \reference Branches
        \memo List components on the branch in simulation and connection order
        \memo Note: this should NOT include splitters or mixers which define
        \memo endpoints of branches
   N1, \field Maximum Branch Flow Rate
       \units m3/sec
   A2, \field Comp1 Type
   A3, \field Comp1 Name
   A4, \field Comp1 Inlet Node Name
   A5, \field Comp1 Outlet Node Name
   A6, \field Comp1 Branch Control Type
       \type choice
       \key ACTIVE
       \key PASSIVE
       \key BYPASS
       \note for ACTIVE, Component tries to set branch flow
       \note for PASSIVE, Component does not try to set branch flow
       \note for BYPASS,  Component designates a loop bypass
   A7, \field Comp2 Type
   A8, \field Comp2 Name
   A9, \field Comp2 Inlet Node Name
   A10, \field Comp2 Outlet Node Name
   A11, \field Comp2 Branch Control Type
       \type choice
       \key ACTIVE
       \key PASSIVE
       \key BYPASS
-- reduced for brevity, up to 11 components allowed per branch
```

An example of this statement in an IDF is:

```
BRANCH, Air Loop Main Branch,
 1.3,
 FAN:SIMPLE:ConstVolume, Supply Fan 1, Air Loop Inlet Node, Cooling Coil Air Inlet Node, ACTIVE,
 COIL:Water:DetailedFlatCooling, DetCoolCoil, Cooling Coil Air Inlet Node, Air Loop Outlet, PASSIVE;
```

Branch Output

The components on a branch are in series and that list is in simulation and connection order. Each branch must obey the rules: the outlet for component 1 has to have the same node name as the inlet for component 2, and so forth.

Eplusout.err contains the test for “individual branch integrity”:

```
   ************* Testing Individual Branch Integrity
   ************* Testing Branch=AIR LOOP MAIN BRANCH
   ************* ....passed
   ************* Testing Branch=COOLING DEMAND INLET
   ************* ....passed
   ************* Testing Branch=COOLING COIL BRANCH
   ************* ....passed
   ************* Testing Branch=DEMAND BYPASS BRANCH
   ************* ....passed
   ************* Testing Branch=COOLING DEMAND OUTLET
   ************* ....passed
   ************* Testing Branch=COOLING SUPPLY OUTLET
   ************* ....passed
```

Connector List

A connector list is a collection of either one or two connection devices (MIXER or SPLITTER). Due to the definition of a loop in EnergyPlus, there is a maximum of one mixer and one splitter allowed for each loop segment. This limitation still allows a tremendous amount of flexibility to the user and can also still be solved within a reasonable amount of time and without a complex solver routine.

The connection list simply allows the specification of the types and names of these devices. This allows the main loop statements to have the flexibility to have multiple lists that can have one or more item.

Field: Connector List Name

This field is an identifying name that will be referenced to main loop statements using this connector list. The name must be unique among connector list names.

Field-Set: Connection Type and Identifying Name (up to 2 allowed)

Depending on the loop, either one or two of the connectors will be specified. If this particular loop only has a single connector (either MIXER or SPLITTER), then only the first two items (type of connection and identifying name of connector) are included. If both a mixer and splitter are present, the additional type of connection and identifying name must be included. Note that the order that the items appear is inconsequential—either the MIXER or the SPLITTER may appear first. This will not affect the simulation.

Field: Type of Connector 1

This field contains the connector type **MIXER** or **SPLITTER**.

Field: Name of Connector 1

This field is an identifying name for the connector. It will be used by other objects in the input file.

Field: Type of Connector 2 (optional)

This field contains the connector type **MIXER** or **SPLITTER**.

Field: Name of Connector 2 (optional)

This field is an identifying name for the connector. It will be used by other objects in the input file.

```
CONNECTOR LIST,
        \memo only two connectors allowed per loop
        \memo if two entered, one must be SPLITTER and one must be MIXER
    A1, \field Connector List Name
        \reference ConnectorLists
    A2, \field Type of Connector 1
        \key SPLITTER
        \key MIXER
    A3, \field Name of Connector 1
    A4, \field Type of Connector 2
        \key SPLITTER
        \key MIXER
    A5; \field Name of Connector 2
```

An example of this statement in an IDF is:

```
        CONNECTOR LIST, Cooling Supply Side Connectors,
                SPLITTER, CW Loop Splitter,
                MIXER, CW Loop Mixer;
```

Connector List Output

No output directly related to Connector Lists currently is presented.

Pipe

In reality, every component is connected to its closest neighbors via a pipe or a duct. At the current time, such detail is not needed in EnergyPlus. Thus, the PIPE component is currently used more as a connection device (for branches that really do not have any components associated with them) or as a bypass than anything else. As such, its input is very simple and its algorithm is equally simple. The current algorithm for a pipe is simply to pass the inlet conditions to the outlet of the pipe component. In the future, when pressure simulations and friction tabulation capabilities are added to EnergyPlus, a pipe may be a required element between components.

Field: PipeName

This alpha field is used as an identifying field for the pipe.

Field: Inlet Node Name

This alpha field is used as an identifying field for the pipe inlet node.

Field: Outlet Node Name

This alpha field is used as an identifying field for the pipe outlet node.

```
PIPE,
 ! [Passes inlet node state variables to outlet node state variables]
   A1, \field PipeName
   A2, \field Inlet Node Name
   A3; \field Outlet Node Name
```

An example of this statement in an IDF is:

```
        PIPE,
             Demand Side Inlet Pipe,
             CW Demand Inlet Node,
             CW Demand Entrance Pipe Outlet Node;
```

Pipe Output

There are no outputs directly related to Pipes.

Group – Plant-Condenser Loops

Plant Loop

The main elements of the Plant Loop syntax are described in further detail below. A map of how the input for this portion of the HVAC input fits together is provided in the following diagram.

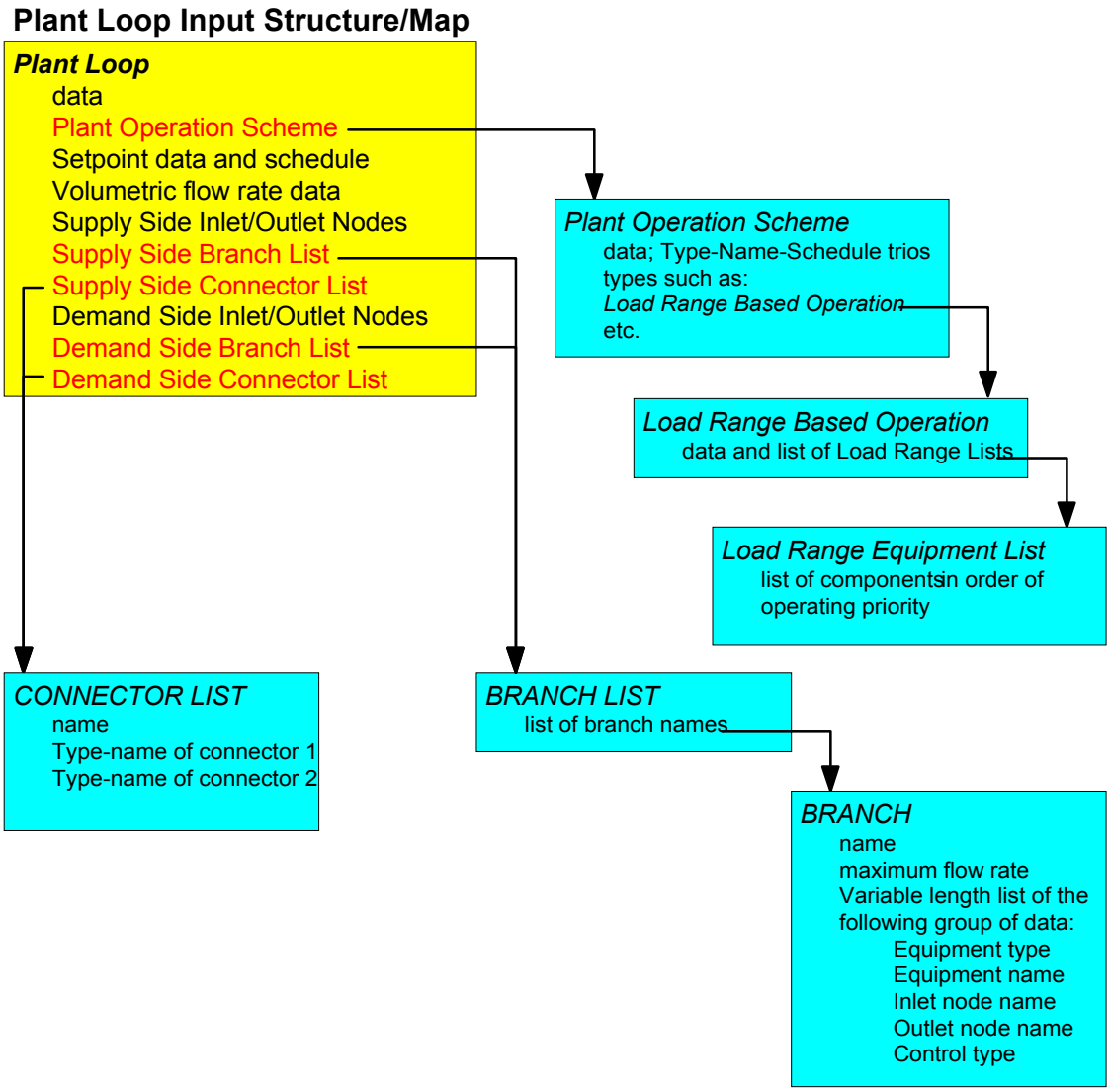

Figure 17. Plant Loop Input Syntax Map

Field: Plant Loop Name

This alpha field is used as an identifying field for the plant loop.

Field: Fluid Type

This alpha field must be a keyword selected from the list of available fluids for an EnergyPlus plant loop. Note from the IDD specification that the only currently acceptable one is “Water”.

Field: Plant Operation Scheme List Name

This alpha field is used as an identifying field for the plant operation scheme. This field ties to the Plant Operation Schemes input structure, which must also be defined.

Field: Loop Temperature Setpoint Schedule Name

This alpha field is used as an identifying field for the Loop Temperature Setpoint Schedule.. This field ties to the ScheduleType input structure, which must also be defined.

Field: Maximum Loop Temperature

This numeric field contains the maximum allowable temperature in Celsius for this loop. Not Implemented in current version.

Field: Minimum Loop Temperature

This numeric field contains the minimum allowable temperature in Celsius for this loop. Not Implemented in current version.

Field: Loop Volumetric Flow Rate Setpoint

This numeric field contains the desired loop flow rate in cubic meters per second.

Field: Maximum Loop Volumetric Flow Rate

This numeric field contains the maximum loop flow rate in cubic meters per second.

Field: Minimum Loop Volumetric Flow Rate

This numeric field contains the minimum loop flow rate in cubic meters per second.

Field: Plant Side Inlet Node Name

This alpha field contains the identifying name given to the Plant Side Inlet Node.

Field: Plant Side Outlet Node Name

This alpha field contains the identifying name given to the Plant Side Outlet Node.

Field: Plant Side Branch List Name

This alpha field contains the identifying name given to the Plant Side Branch List.

Field: Plant Side Connector List Name

This alpha field contains the identifying name given to the Plant Side Connector List.

Field: Demand Side Inlet Node Name

This alpha field contains the identifying name given to the Demand Side Inlet Node.

Field: Demand Side Outlet Node Name

This alpha field contains the identifying name given to the Demand Side Outlet Node.

Field: Demand Side Branch List Name

This alpha field contains the identifying name given to the Demand Side Branch List.

Field: Demand Side Connector List Name

This alpha field contains the identifying name given to the Demand Side Connector List.

Field: Load Distribution Scheme

This alpha field contains the Load Distribution Scheme Keyword. The Load Distribution Scheme selects the algorithm used to sequence equipment operation in order to meet the plant loop demand. Currently, two schemes are functional. **Overloading** uses each piece of equipment to its maximum part load ratio and will operate the last required piece of equipment between its minimum and maximum part load ratio in order to meet the loop demand. If the remaining loop

demand allocated to the last operating piece of equipment is less than the equipment minimum part load ratio, the equipment will operate at the minimum part load ratio and over-cool the loop. **Optimal** operates each piece of equipment at its optimal part load ratio and will operate the last component between its minimum and maximum part load ratio in order to meet the loop demand.

The complete IDD for the Plant Loop is shown below:

```
PLANT LOOP,
  A1 , \field Plant Loop Name
  A2 , \field fluid type
       \type choice
       \key Water
  A3 , \field Plant Operation Scheme List Name
  A4 , \field Loop Temperature Setpoint Schedule Name
       \type object-list
       \object-list ScheduleNames
  N1 , \field Maximum Loop Temperature
       \units C
  N2 , \field Minimum Loop Temperature
       \units C
  N3 , \field Loop Volumetric Flow Rate Setpoint
       \units C
  N4 , \field Maximum Loop Volumetric Flow Rate
       \units m3/sec
  N5 , \field Minimum Loop Volumetric Flow Rate
       \units m3/sec
  A5, \field Plant Side Inlet Node Name
  A6, \field Plant Side Outlet Node Name
  A7, \field Plant Side Branch List Name
      \object-list BranchLists
  A8, \field Plant Side Connector List Name
      \object-list ConnectorLists
  A9, \field Demand Side Inlet Node Name
  A10, \field Demand Side Outlet Nodes Name
  A11, \field Demand Side Branch List Name
      \object-list BranchLists
  A12; \field Demand Side Connector List Name
       \object-list ConnectorLists
  A13; \field Load Distribution Scheme
       \type choice
       \key Optimal
       \key Overloading
```

An example of this statement used in an IDF is:

```
     PLANT LOOP,
          Hot Water Loop,
          Water,
          Hot Loop Operation,
          HW Loop Temp Schedule,
          100,  ![Maximum Loop Temperature]
          10,   ![Minimum Loop Temperature]
          0.0043,  ![Loop Volumetric Flow Rate Setpoint ]
          0.005,  ![Maximum Loop Volumetric Flow Rate]
          0 ,   ![Minimum Loop Volumetric Flow Rate]
          HW Supply Inlet Node,HW Supply Outlet Node, !plant supply side inlet/outlet
                Heating Supply Side Branches,
                Heating Supply Side Connectors,
          HW Demand Inlet Node, HW Demand Outlet Node, !plant demand side inlet/outlet
                Heating Demand Side Branches,
                Heating Demand Side Connectors,
          Overloading;
```

Plant Loop Outputs

In the following output variables, “Debug” denotes variables that are used primarily by the developers and whose names may be cryptic (i.e. SSInletNode – Supply Side Inlet Node).

```
HVAC,Average,Plant Loop Cooling Demand[W]
```

```
HVAC,Average,Plant Loop Heating Demand[W]
HVAC,Average,Debug Unmet Plant Loop Demand[W]
HVAC,Average,Debug Plant Loop RemDemand[W]
HVAC,Average,Debug Plant Loop Bypass Fraction
HVAC,Average,Debug SSInletNode Flowrate[kg/s]
HVAC,Average,Debug SSInletNode Temperature[C]
HVAC,Average,Debug SSOutletNode Flowrate[kg/s]
HVAC,Average,Debug SSOutletNode Temperature[C]
```

Condenser Loop

The map for condenser loop input is very similar to that for the plant loop. The main differences are some keywords and applicable components. This is depicted in the following diagram.

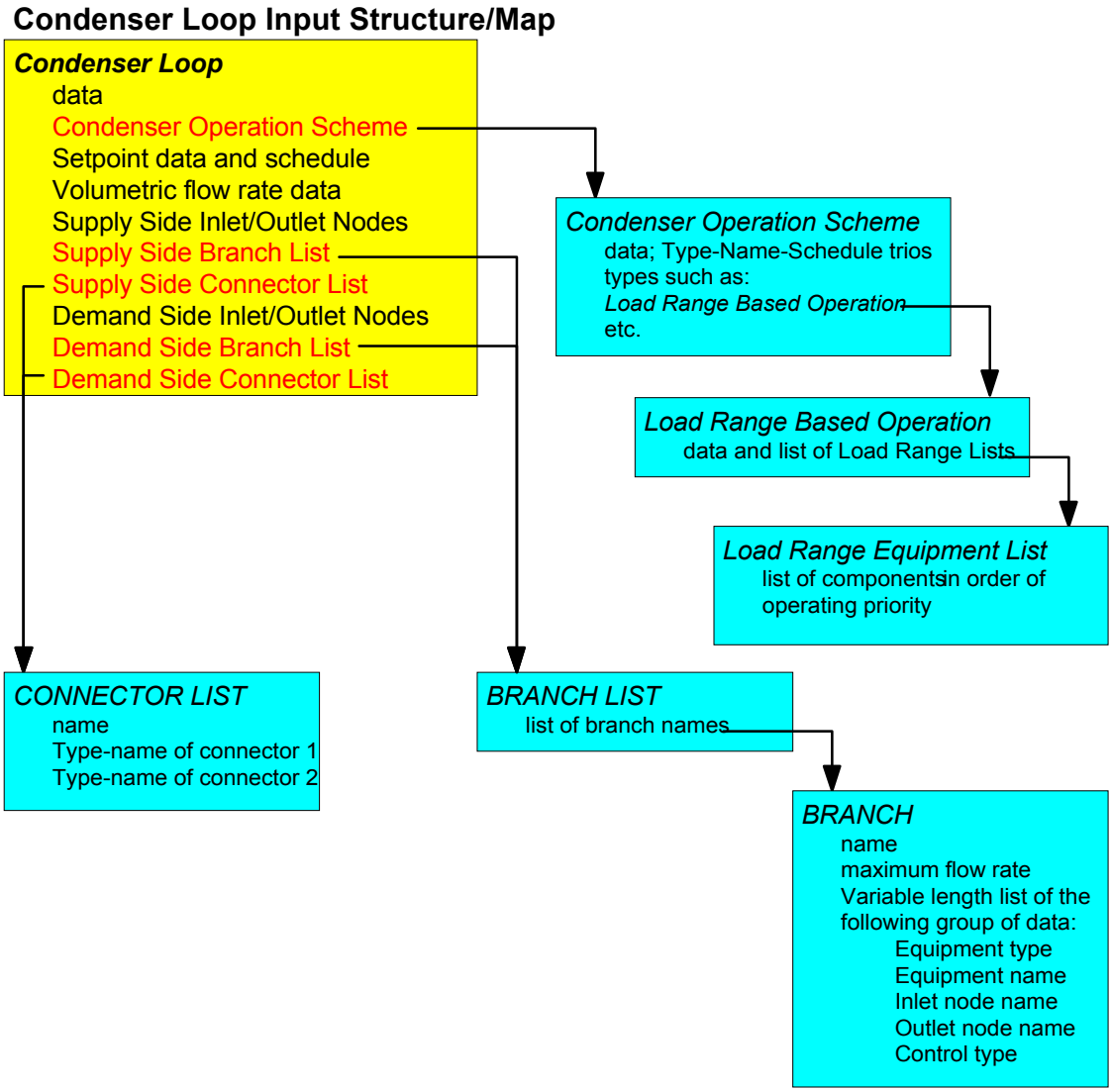

Figure 18. Condenser Loop Input Syntax Map

Field: Condenser Loop Name

This alpha field is used as an identifying field for the condenser loop.

Field: Fluid Type

This alpha field must be a keyword selected from the list of available fluids for an EnergyPlus plant loop. Note from the IDD specification that the only currently acceptable one is “Water”.

Field: Condenser Operation Scheme List Name

This alpha field is used as an identifying field for the condenser operation scheme. This field ties to the Condenser Operation Schemes input structure, which must also be defined.

Field: Loop Temperature Setpoint Schedule Name

This alpha field is used as an identifying field for the Loop Temperature Setpoint Schedule. This field ties to the ScheduleType input structure, which must also be defined.

Field: Maximum Loop Temperature

This numeric field contains the maximum allowable temperature in Celsius for this loop. Not Implemented in current version.

Field: Minimum Loop Temperature

This numeric field contains the minimum allowable temperature in Celsius for this loop. Not Implemented in current version.

Field: Loop Volumetric Flow Rate Setpoint

This numeric field contains the desired loop flow rate in cubic meters per second.

Field: Maximum Loop Volumetric Flow Rate

This numeric field contains the maximum loop flow rate in cubic meters per second.

Field: Minimum Loop Volumetric Flow Rate

This numeric field contains the minimum loop flow rate in cubic meters per second.

Field: Condenser Side Inlet Node Name

This alpha field contains the identifying name given to the Condenser Side Inlet Node.

Field: Condenser Side Outlet Node Name

This alpha field contains the identifying name given to the Condenser Side Outlet Node.

Field: Condenser Side Branch List Name

This alpha field contains the identifying name given to the Condenser Side Branch List.

Field: Condenser Side Connector List Name

This alpha field contains the identifying name given to the Condenser Side Connector List.

Field: Demand Side Inlet Node Name

This alpha field contains the identifying name given to the Demand Side Inlet Node.

Field: Demand Side Outlet Nodes Name

This alpha field contains the identifying name given to the Demand Side Outlet Node.

Field: Condenser Demand Side Branch List Name

This alpha field contains the identifying name given to the Demand Side Branch List.

Field: Condenser Demand Side Connector List Name

This alpha field contains the identifying name given to the Demand Side Connector List.

The IDD for Condenser loop is:

```
CONDENSER LOOP,
  A1 , \field Condenser Loop Name
  A2 , \field fluid type
       \type choice
       \key Water
  A3 , \field Condenser Operation Scheme List Name
  A4 , \field Loop Temperature Setpoint Schedule Name
       \type object-list
       \object-list ScheduleNames
  N1 , \field Maximum Loop Temperature
       \units C
  N2 , \field Minimum Loop Temperature
       \units C
  N3 , \field Loop Volumetric Flow Rate Setpoint
       \units C
  N4 , \field Maximum Loop Volumetric Flow Rate
       \units m3/sec
  N5 , \field Minimum Loop Volumetric Flow Rate
       \units m3/sec
  A5, \field Condenser Side Inlet Node Name
  A6, \field Condenser Side Outlet Node Name
  A7, \field Condenser Side Branch List Name
        \object-list BranchLists
  A8, \field Condenser Side Connector List Name
       \object-list ConnectorLists
  A9, \field Demand Side Inlet Node Name
  A10, \field Demand Side Outlet Nodes Name
  A11, \field Condenser Demand Side Branch List Name
        \object-list BranchLists
  A12; \field Condenser Demand Side Connector List Name
       \object-list ConnectorLists
  A13; \field Load Distribution Scheme
       \type choice
       \key Optimal
       \key Overloading
```

An example of this statement used in an IDF is:

```
CONDENSER LOOP,
   Chilled Water Condenser Loop,
   Water,
   Tower Loop Operation,
   CW Loop Temp Schedule,
   80,  ![Maximum Loop Temperature]
 0.5,   ![Minimum Loop Temperature]
 0.001, ![Loop Volumetric Flow Rate Setpoint ]
 0.0011,![Maximum Loop Volumetric Flow Rate]
   0,   ![Minimum Loop Volumetric Flow Rate]
 Condenser Supply Inlet Node,Condenser Supply Outlet Node, !condenser supply side inlet/outlet
          Condenser Supply Side Branches,
          Condenser Supply Side Connectors,
 Condenser Demand Inlet Node, Condenser Demand Outlet Node, !plant demand side inlet/outlet
          Condenser Demand Side Branches,
          Condenser Demand Side Connectors,
          Optimal;
```

Condenser Loop Outputs

```
HVAC,Average,Condenser Loop Inlet Temperature [C]
HVAC,Average,Condenser Loop Outlet Temperature [C]
HVAC,Average,Condenser Loop Bypass Fraction
```

Heat Recovery Loop

The plant heat recovery loop connects plant equipment with heat recovery options to the hot water storage tank on a plant hot water loop. The heat recovery loop is shown in the figure below. The user inputs the name, inlet node and outlet node of each component on the loop. In addition, the name of the hot water storage tank along with its inlet and outlet nodes is required. Pumping power required to operate the heat recovery loop is calculated on the basis of the total pressure head across the pump.

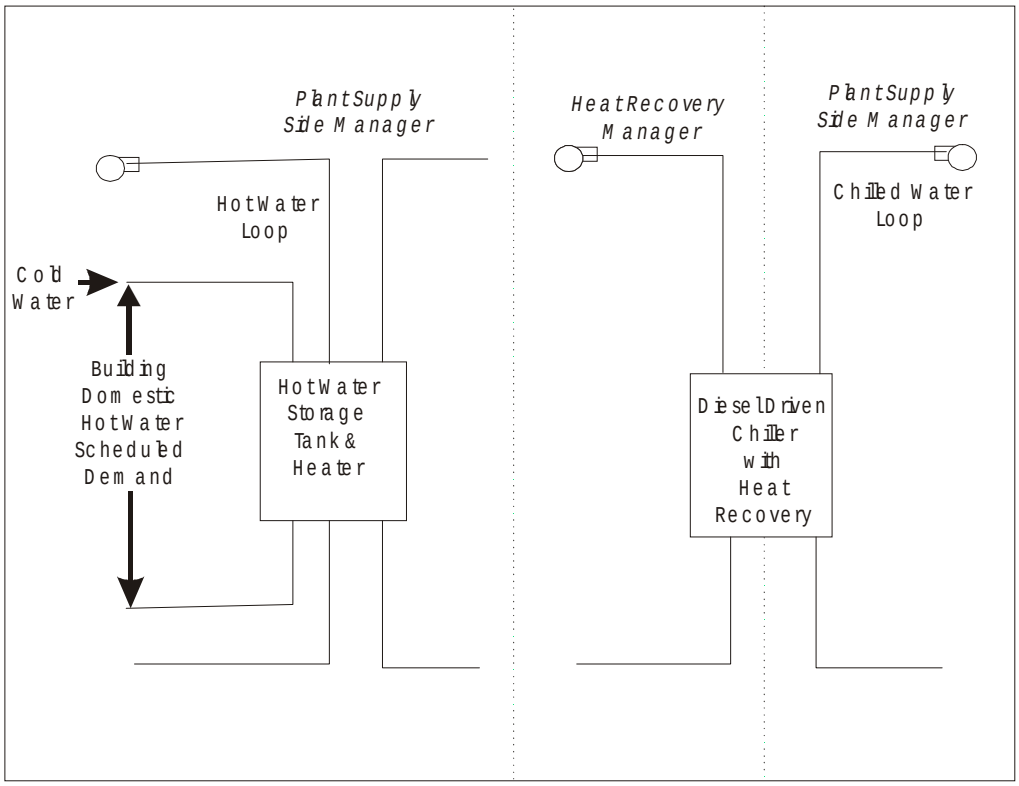

Figure 19. Heat Recovery Loop Schematic

Field: Heat Recovery Loop Name

This alpha field contains the identifying name for the heat recovery loop.

Field: Fluid Type

This alpha field must be a keyword selected from the list of available fluids for an EnergyPlus plant loop. Note from the IDD specification that the only currently acceptable one is “Water”.

Field: Maximum Loop Temperature

This numeric field contains the maximum allowable temperature in Celsius for this loop. Not Implemented in current version.

Field: Heat Recovery Pump Efficiency

This numeric field contains the pump efficiency specified as a fraction (0.0-1.0).

Field: Loop head

This numeric field contains the total pumping pressure head. This input is used to calculate pumping power on the heat recovery loop.

Field: Water heater/storage tank Name

This alpha field contains the identifying name for the water heater/ storage tank.

Field: Water heater/storage Inlet Node Name

This alpha field contains the identifying name given to the Water heater/storage Inlet Node.

Field: Water heater/storage Outlet Node Name

This alpha field contains the identifying name given to the Water heater/storage Outlet Node.

FieldSet: (Name, Inlet, Outlet) up to 5

Up to five heat recovery loop components may be specified by providing the name of the component and the inlet and outlet nodes.

Heat Recovery Loop Component Name

This alpha field contains the identifying name for the Heat Recovery Loop Component.

Field: Heat Recovery Loop Component Inlet Node Name

This alpha field contains the identifying name given to the Heat Recovery Loop Component Inlet Node.

Field: Heat Recovery Loop Component Outlet Node Name

This alpha field contains the identifying name given to the Heat Recovery Loop Component Outlet Node.

```
HEAT RECOVERY LOOP,
  A1 , \field Heat Recovery Loop Name
  A2 , \field Fluid Type
       \type choice
       \key Water
  N1 , \field Maximum Loop Temperature
       \units C
  N2 , \field Heat Recovery Pump Efficiency
       \units dimensionless 0-1
  N3 , \field Loop head
       \units m
  A3, \field Water heater/storage tank Name
  A4, \field Water heater/storage Inlet Node Name
  A5, \field Water heater/storage Outlet Node Name
  A6, \field Heat Recovery Loop 1 Component Name
  A7, \field Heat Recovery Loop 1 Component Inlet Node Name
  A8, \field Heat Recovery Loop 1 Component Outlet Node Name
  A9, \field Heat Recovery Loop 2 Component Name
  A10, \field Heat Recovery Loop 2 Component Inlet Node Name
  A11, \field Heat Recovery Loop 2 Component Outlet Node Name
  A12, \field Heat Recovery Loop 3 Component Name
  A13, \field Heat Recovery Loop 3 Component Inlet Node Name
  A14, \field Heat Recovery Loop 3 Component Outlet Node Name
  A15, \field Heat Recovery Loop 4 Component Name
  A16, \field Heat Recovery Loop 4 Component Inlet Node Name
  A17, \field Heat Recovery Loop 4 Component Outlet Node Name
  A18, \field Heat Recovery Loop 5 Component Name
  A19, \field Heat Recovery Loop 5 Component Inlet Node Name
  A20; \field Heat Recovery Loop 5 Component Outlet Node Name
```

Group – Plant-Condenser Control

Operation Schemes (Plant and Condenser)

Plants and condenser loops must have some mechanism for controlling the operation of the loop and which equipment is available under what conditions. Since there may be multiple control schemes that are assigned various priorities associated with each loop, an overall operation scheme must be defined. The overall scheme consists of the object name, an identifying name that is referenced in the main plant or condenser loop statement, and a list of operation schemes. Each operation scheme must have the type of operation scheme, its identifying name, and the schedule that defines its availability. Note that the order in which the individual operation schemes appear in this list defines its priority versus the others. The first scheme appearing in the list is given the highest priority, the second scheme has second highest priority, etc. In other words, if according to its schedule, the first operation scheme is available, then it is used by the simulation to define how the plant or condenser loop operates. If it is not available, the second operation scheme in the list is checked to see if it is available until the highest priority scheme that is also available is found.

Plant Operation Schemes

Field: PlantOperationSchemeName

This alpha field contains the identifying name given to the Plant Operation Scheme.

Field Set (Key, Name, Schedule) up to 8

Field: KEY--Control Scheme

This alpha field contains the keyword for the type of control scheme used. Currently, the only option is “LOAD RANGE BASED OPERATION”.

Field: Control Scheme Name

This alpha field contains the identifying name given to the control scheme.

Field: Control Scheme Schedule

This alpha field contains the schedule name for the control scheme. This schedule consists of weeks and days, with the days containing "0 or 1" for each hour of the day. This binary schedule (0 for off, 1 for on) determines if the control scheme is operating for that hour of day or not.

```
PLANT OPERATION SCHEMES,
       \memo List operation schemes in order of priority (lowest to highest )
       \memo Currently 'LOAD RANGE BASED OPERATION' is the only scheme available
  A1 , \field PlantOperationSchemeName
       \reference PlantOperationSchemes
  A2 , \field KEY--Control Scheme 1
       \type choice
       \key Load Range Based Operation
  A3 , \field Control Scheme Name 1
  A4 , \field Control Scheme Schedule 1
       \type object-list
       \object-list ScheduleNames
-- reduced for brevity --
  A23, \field KEY--Control Scheme 1
       \type choice
       \key Load Range Based Operation
  A24, \field Control Scheme Name 1
  A25; \field Control Scheme Schedule 1
       \type object-list
       \object-list ScheduleNames
```

An example of this statement in the IDF is:

```
PLANT OPERATION SCHEMES,CW Loop Operation,
        LOAD RANGE BASED OPERATION, Peak Operation, On Peak,
        LOAD RANGE BASED OPERATION, Off Peak Operation, Off Peak;
```

In this IDF example, "LOAD RANGE BASED OPERATION" is the type of control scheme. "Peak Operation" and "Off Peak Operation" are the names of two different load range based controls defined separately (see below --). "On Peak" and "Off Peak" are schedules defined elsewhere in the input file.

As the note in the IDD for this syntax reveals, at the current time, EnergyPlus only has a "LOAD RANGE BASED OPERATION" type of control scheme implemented. Others will be added later. The load range based operation scheme has two statements associated with it: a main statement that defines the ranges that individual priority settings are valid and the lists of equipment that may be used for each range.

Condenser Operation Schemes

Field: CondenserOperationSchemeName

This alpha field contains the identifying name given to the Condenser Operation Scheme.

Field Set (Key, Name, Schedule) up to 8

Field: KEY--Control Scheme

This alpha field contains the keyword for the type of control scheme used. Currently, the only option is "LOAD RANGE BASED OPERATION".

Field: Control Scheme Name

This alpha field contains the identifying name given to the control scheme.

Field: Control Scheme Schedule

This alpha field contains the schedule name for the control scheme. This schedule consists of weeks and days, with the days containing "0 or 1" for each hour of the day. This binary schedule (0 for off, 1 for on) determines if the control scheme is operating for that hour of day or not.

```
CONDENSER OPERATION SCHEMES,
   !List operation schemes in order of priority (lowest to highest )
   !Currently 'LOAD RANGE BASED OPERATION' is the only scheme available
  A1 , \field CondenserOperationSchemeName
       \reference CondenserOperationSchemes
  A2 , \field KEY--Control Scheme 1
       \type choice
       \key Load Range Based Operation
  A3 , \field Control Scheme Name 1
  A4 , \field Control Scheme Schedule 1
       \type object-list
       \object-list ScheduleNames
-- reduced for brevity --
  A23, \field KEY--Control Scheme 1
       \type choice
       \key Load Range Based Operation
  A24, \field Control Scheme Name 1
  A25; \field Control Scheme Schedule 1
       \type object-list
       \object-list ScheduleNames
```

An example of this statement in the IDF is:

```
    CONDENSER OPERATION SCHEMES,Tower Loop Operation,
        LOAD RANGE BASED OPERATION, Year Round Tower Operation, ON;
```

Load Range Based Operation

The "LOAD RANGE BASED OPERATION" statement defines the different ranges and which equipment list is valid for each range. After the keyword and the identifying name, a series of data trios is expected. In each trio, there is a lower limit for the load range, an upper limit for the load range, and a name that links to an equipment availability list (the "LOAD RANGE EQUIPMENT LIST").

Field: Name

This alpha field contains the identifying name for the control scheme.

Field Set (Lower limit, Upper Limit, Equip List name) up to 10

Field: Load Range Lower Limit

This numeric field contains the lower demand range (W) for the equipment list. If demand is below this value, then this equipment list will not turn on to meet the demand.

Field: Load Range Upper Limit

This numeric field contains the upper demand range (W) for the equipment list. If demand is above this value, then this equipment list will not turn on to meet the demand.

Field: Priority Control Equip List Name

This alpha field contains the identifying name for the Equipment List. This field ties to the Load Range Equipment List input structure, which must also be defined.

Below is the data description for the LOAD RANGE BASED OPERATION statement.

```
LOAD RANGE BASED OPERATION,
    \memo Warning -- all cooling range limits are entered as negative numbers.
   A1 ,\field Name
   N1 ,\field Load Range Lower Limit 1
       \type real
       \units W
   N2 ,\field Load Range Upper Limit 1
       \type real
       \units W
   A2 ,\field Priority Control Equip List Name 1
   N3 ,\field Load Range Lower Limit 2
       \type real
       \units W
   N4 ,\field Load Range Upper Limit 2
       \type real
       \units W
   A3 ,\field Priority Control Equip List Name 2
--reduced for brevity –
   N19,\field Load Range Lower Limit 10
       \type real
       \units W
   N20,\field Load Range Upper Limit 10
       \type real
       \units W
   A11;\field Priority Control Equip List Name 10
```

An example of this statement in an IDF is:

```
LOAD RANGE BASED OPERATION, Peak Operation,
        0,-7000,   Chiller Plant,
        -7000,-24500,   Chiller Plant and Purchased,
        -24500,-500000, Purchased Only;
```

Note that for cooling equipment loads, capacities, and ranges are all specified as *negative numbers*. This particular load based operation scheme has three different ranges. “Chiller Plant”, “Chiller Plant and Purchased”, and “Purchased Only” are names which link to various “LOAD RANGE EQUIPMENT LIST” inputs as described below. Gaps may be left in the operation scheme, but to operate equipment over the entire range, the upper limit of a given range must equal the lower limit of the next range as shown in the example.

Load Range Equipment List

A LOAD RANGE EQUIPMENT LIST statement is used to define the equipment that will be available for a particular load range and the priority in which such equipment will be used. Each statement contains the object name, an identifying name (links the definition back to the “LOAD RANGE BASED OPERATION” statement), and a variable length of data pairs. These pairs refer to a plant equipment type and an identifying name. The type in this list of pairs must correspond to a valid plant object as described in the next subsection.

Field: Equip List Name

This alpha field contains the identifying name for the Equipment List.

Field Set (Key, Name) up to 10

Remember the order of equipment on this list determines operation priority. Equipment on the list first will try to meet demand first. These fields tie to the Equipment Definition input structure, which must also be defined.

Field: KEY--Plant Equip

This alpha field contains the keyword for the type of equipment in operation. Example: (WATERHEATER:SIMPLE, CHILLER:BLAST, PURCHASED:CHILLED WATER). The full list of allowable plant equipment is again found as the objects in the section (Group – Plant-Condenser Equipment).

Field: Equip Name

This alpha field contains the identifying name for the equipment in operation. This distinguishes between two different pieces of equipment of the same type.

```
LOAD RANGE EQUIPMENT LIST,
       \memo List plant equip in order of operating priority
  A1 , \field Equip List Name
  A2 , \field KEY--Plant Equip 1
  A3 , \field Equip Name 1
  A4 , \field KEY--Plant Equip 2
  A5 , \field Equip Name 2
  A6 , \field KEY--Plant Equip 3
  A7 , \field Equip Name 3
  A8 , \field KEY--Plant Equip 4
  A9 , \field Equip Name 4
  A10, \field KEY--Plant Equip 5
  A11, \field Equip Name 5
  A12, \field KEY--Plant Equip 6
  A13, \field Equip Name 6
  A14, \field KEY--Plant Equip 7
  A15, \field Equip Name 7
  A16, \field KEY--Plant Equip 8
  A17, \field Equip Name 8
  A18, \field KEY--Plant Equip 9
  A19, \field Equip Name 9
  A20, \field KEY--Plant Equip 10
  A21; \field Equip Name 10
```

An example of this statement in an IDF is:

```
LOAD RANGE EQUIPMENT LIST, Chiller Plant and Purchased,
        CHILLER:BLAST, Big Chiller,
        PURCHASED:CHILLED WATER, Purchased Cooling;
```

Note that this list is the middle range defined in the LOAD RANGE BASED OPERATION statement named “Peak Operation” above. This defines the equipment available when the load encountered by the plant (chiller water demand, for example) is between –7000 W and –24500 W. EnergyPlus will run the “Big Chiller” first up to its capacity and then attempt to meet the remaining load (while in that range) with the next piece of equipment (in this case, “Purchased:Cooling”) in the list.

Group – Plant-Condenser Equipment

Equipment Types (Plant and Condenser)

In each LOAD RANGE EQUIPMENT LIST described using the above syntax, various equipment types and names must be given. Each type-name pair must then have a corresponding equipment definition. This subsection lists the various equipment types that are available and examples from an IDF. Where appropriate, notes and comments on the input structure are provided.

Chiller: Absorption

Field: Chiller Name

This alpha field contains the identifying name for the absorption chiller.

Field: Nominal Capacity

This numeric field contains the nominal cooling capability of the chiller in Watts.

Field: Nominal Pumping Power

This numeric field contains the nominal pumping power of the absorber in Watts.

Field: Plant_Side_Inlet_Node

This alpha field contains the identifying name for the absorption chiller plant side inlet node.

Field: Plant_Side_Outlet_Node

This alpha field contains the identifying name for the absorption chiller plant side outlet node.

Field: Condenser_Side_Inlet_Node

This alpha field contains the identifying name for the absorption chiller condenser side inlet node.

Field: Condenser_Side_Outlet_Node

This alpha field contains the identifying name given to the Heat Recovery Loop Component Outlet Node.

Field: Minimum Part Load Ratio

This numeric field contains the absorption chiller's minimum part load ratio. The expected range is between 0 and 1.

Field: Maximum Part Load Ratio

This numeric field contains the absorption chiller's maximum part load ratio. This value may exceed 1, but the normal range is between 0 and 1.1.

Field: Opt Part Load Ratio

This numeric field contains the absorption chiller's optimum part load ratio. This is the part load ratio at which the chiller performs at its maximum COP.

Field: Temp Design Condenser Inlet

This numeric field contains the absorption chiller's condenser inlet design temperature in Celsius.

Field: Temp Design Evaporator Outlet

This numeric field contains the absorption chiller's evaporator outlet design temperature in Celsius.

Field: Design Condenser Volumetric Water Flow Rate

This numeric field contains the absorption chiller's design condenser water flow rate in cubic meters per second.

Steam Use Part Load Ratio Curve

The Steam Use Part Load Ratio Curve is a quadratic equation that determines the Ratio of the steam load on the absorber to the demand on the chiller. The defining equation is:

$$SteamInputRatio = \frac{C1}{PLR} + C2 + C3 * PLR$$

$$ElectricInputRatio = C1 + C2 * PLR + C3 * PLR^2$$

The following three fields contain the coefficients for the equation.

Field: Coefficient1 of the steam use part load ratio curve

C1 in the SteamInput Ratio Curve. This value is obtained by fitting manufacturers' performance data to the curve.

Field: Coefficient2 of the steam use part load ratio curve

C2 in the SteamInput Ratio Curve. This value is obtained by fitting manufacturers' performance data to the curve.

Field: Coefficient3 of the steam use part load ratio curve

C3 in the SteamInput Ratio Curve. This value is obtained by fitting manufacturers' performance data to the curve.

Pump Electric Use Part Load Ratio Curve

The Pump Electric Use Part Load Ratio Curve is a quadratic equation that determines the Ratio of the actual absorber pumping power to the nominal pumping power. The defining equation is:

$$ElectricInputRatio = C1 + C2 * PLR + C3 * PLR^2$$

The following three fields contain the coefficients for the equation.

Field: Coefficient1 of the pump electric use part load ratio curve

C1 in the Pump Electric Use Part Load Ratio Curve. This value is obtained by fitting manufacturers' performance data to the curve.

Field: Coefficient2 of the pump electric part load ratio curve

C2 in the Pump Electric Use Part Load Ratio Curve. This value is obtained by fitting manufacturers' performance data to the curve.

Field: Coefficient3 of the pump electric use part load ratio curve

C3 in the Pump Electric Use Part Load Ratio Curve. This value is obtained by fitting manufacturers' performance data to the curve.

Field: Temp Lower Limit Evaporator Outlet

This numeric field contains the lower limit for the evaporator outlet temperature. This temperature acts as a cut off for heat transfer in the evaporator, so that the fluid doesn't get too cold.

Field: Absorber Steam Inlet Node

This alpha field contains the identifying name given to the Absorber Steam Inlet Node. Steam loops have not been implemented in Beta 5

Field: Absorber Steam Outlet Node

This alpha field contains the identifying name given to the Absorber Steam Outlet Node. Steam loops have not been implemented in Beta 5

```
CHILLER:ABSORPTION,
       \memo This chiller model is the empirical model from the Building Loads
       \memo and System Thermodynamics (BLAST) program.  Chiller performance
       \memo curves are generated by fitting catalog data to third order
       \memo polynomial equations.  Two sets of coefficients are required.
  A1 , \field Chiller Name
  N1 , \field Nominal Capacity
       \units W
  N2 , \field Nominal Pumping Power
       \units W
  A2 , \field Plant_Side_Inlet_Node
  A3 , \field Plant_Side_Outlet_Node
  A4 , \field Condenser_Side_Inlet_Node
  A5 , \field Condenser_Side_Outlet_Node
  N3 , \field Minimum Part Load Ratio
       \minimum 0.0
  N4 , \field Maximum Part Load Ratio
       \minimum 0.0
  N5 , \field Opt Part Load Ratio
       \minimum 0.0
  N6 , \field Temp Design Condenser Inlet
       \units C
  N7 , \field Temp Design Evaporator Outlet
       \units C
  N8, \field Design Condenser Volumetric Water Flow Rate
       \units m3/s
       \Note  The steam use coefficients below specify the
       \Note  steam use as a fraction of chiller operating capacity
  N9, \field Coefficient1 of the steam use part load ratio curve
  N10, \field Coefficient2 of the steam use part load ratio curve
  N11, \field Coefficient3 of the steam use part load ratio curve
       \Note  The pump electric use coefficients below specify the
       \Note  pumping power as a fraction of Nominal pumping power
  N12, \field Coefficient1 of the pump electric use part load ratio curve
  N13, \field Coefficient2 of the pump electric part load ratio curve
  N14, \field Coefficient3 of the pump electric use part load ratio curve
  N15, \field Temp Lower Limit Evaporator Outlet
       \units C
  A6 , \field Absorber Steam Inlet Node
  A7 ; \field Absorber Steam Outlet Node
```

Absorption Chiller Outputs

Chiller:CONST COP

This chiller model is based on a simple, constant COP simulation of the chiller. In this case, performance does not vary with chilled water temperature or condenser conditions.

Such a model is useful when the user does not have access to detailed performance data.

```
CHILLER:CONST COP,
       \memo This constant COP chiller model provides a means of quickly specifying a
       \memo Chiller where performance data is not available.
  A1 , \field Chiller Name
  N1 , \field Nominal Capacity
       \units W
  N2 , \field COP
  N3 , \field Design Condenser Volumetric Water Flow Rate
       \units m3/sec
  A2 , \field Plant_Side_Inlet_Node
  A3 , \field Plant_Side_Outlet_Node
  A4 , \field Condenser_Side_Inlet_Node
  A5 ; \field Condenser_Side_Outlet_Node
```

Field: Chiller Name

This alpha field contains the identifying name for the constant COP chiller.

Field: Nominal Capacity

This numeric field contains the nominal cooling capability of the chiller in Watts.

Field: COP

This numeric field contains the Chiller's coefficient of performance.

Field: Design Condenser Volumetric Water Flow Rate

This numeric field contains the electric chiller's design condenser water flow rate in cubic meters per second.

Field: Plant_Side_Inlet_Node

This alpha field contains the identifying name for the constant COP chiller plant side inlet node.

Field: Plant_Side_Outlet_Node

This alpha field contains the identifying name for the constant COP chiller plant side outlet node.

Field: Condenser_Side_Inlet_Node

This alpha field contains the identifying name for the constant COP chiller condenser side inlet node.

Field: Condenser_Side_Outlet_Node

This alpha field contains the identifying name for the constant COP chiller condenser side outlet node.

An example of this statement in an IDF is:

```
CHILLER:CONST COP, Little Chiller,
        25000,
        2.5,
        0.0011,
        NODE_36, NODE_38,
        NODE_41, NODE_43;
```

Constant COP Chiller Outputs

```
HVAC,Average,Chiller Power[W]
HVAC,Average,Chiller Evap Heat Trans Rate[W]
HVAC,Average,Chiller Evap Water Inlet Temp[C]
HVAC,Average,Chiller Evap Water Outlet Temp[C]
HVAC,Average,Chiller Evap Water mass flow rate[kg/s]
HVAC,Average,Chiller Cond Heat Trans Rate[W]
HVAC,Average,Chiller Cond Water Inlet Temp[C]
HVAC,Average,Chiller Cond Water Outlet Temp[C]
HVAC,Average,Chiller Cond Water mass flow rate[kg/s]
```

Chiller:Electric

This chiller model is the empirical model from the Building Loads and System Thermodynamics (BLAST) program. Capacity, power, and full load are each defined by a set of performance curves (quadratics). Chiller performance curves are generated by fitting catalog data to third order polynomial equations.

Field: Chiller Name

This alpha field contains the identifying name for the electric chiller.

Field: Condenser Type

This alpha field contains the keyword for the type of condenser, either AIR COOLED, or WATER COOLED.

Field: Nominal Capacity

This numeric field contains the nominal cooling capability of the chiller in Watts.

Field: COP

This numeric field contains the chiller's coefficient of performance. For a water-cooled chiller, this number does not include energy use due to condenser pumps and/or fans. For an air-cooled chiller, this number includes condenser fan power.

Field: Plant_Side_Inlet_Node

This alpha field contains the identifying name for the electric chiller plant side inlet node.

Field: Plant_Side_Outlet_Node

This alpha field contains the identifying name for the electric chiller plant side outlet node.

Field: Condenser_Side_Inlet_Node

This alpha field contains the identifying name for the electric chiller condenser side inlet node. Both water- and air-cooled chillers require this field. However, in the case of an air-cooled chiller, no condenser (water) loop is specified.

Field: Condenser_Side_Outlet_Node

This alpha field contains the identifying name for the electric chiller condenser side outlet node. Both water- and air-cooled chillers require this field. However, in the case of an air-cooled chiller, no condenser (water) loop is specified.

Field: Minimum Part Load Ratio

This numeric field contains the electric chiller's minimum part load ratio. The expected range is between 0 and 1.

Field: Maximum Part Load Ratio

This numeric field contains the electric chiller's maximum part load ratio. This value may exceed 1, but the normal range is between 0 and 1.1.

Field: Opt Part Load Ratio

This numeric field contains the electric chiller's optimum part load ratio. This is the part load ratio at which the chiller performs at its maximum COP.

Field: Temp Design Condenser Inlet

This numeric field contains the electric chiller's condenser inlet design temperature in Celsius.

Field: Temp Rise Coefficient

This numeric field contains the electric chiller's temperature rise coefficient which is defined as the ratio of the required change in condenser water temperature to a given change in chilled water temperature, which maintains the capacity at the nominal value.. This is calculated as the following ratio:

$$\frac{TCL_{required} - TCL_{rated}}{TEL_{required} - TEL_{rated}}$$

where:

$TCL_{requiredl}$ = Required leaving condenser water outlet temperature to maintain rated capacity

TCL_{rated} = Rated leaving condenser water outlet temperature at rated capacity

$TEL_{required}$ = Required leaving evaporator water outlet temperature to maintain rated capacity

TEL_{rated} = Rated leaving evaporator water outlet temperature at rated capacity

Field: Temp Design Evaporator Outlet

This numeric field contains the electric chiller's evaporator outlet design temperature in Celsius.

Field: Design Condenser Volumetric Water Flow Rate

This numeric field contains the electric chiller's design condenser water flow rate in cubic meters per second. For an air-cooled chiller, any number (> 0.0) is a valid entry as this entry is not used within the program when modeling the air-cooled electric chiller.

Capacity Ratio Curve

The Capacity Ratio Curve is a quadratic equation that determines the Ratio of Available Capacity to Nominal Capacity. The defining equation is:

$$AvailToNominalCapacityRatio = C_1 + C_2\Delta_{temp} + C_3\Delta_{temp}^2$$

The following three fields contain the coefficients for the quadratic equation.

Field: Coefficient1 of the capacity ratio curve

This numeric field contains the first coefficient for the capacity ratio curve.

Field: Coefficient2 of the capacity ratio curve

This numeric field contains the second coefficient for the capacity ratio curve.

Field: Coefficient3 of the capacity ratio curve

This numeric field contains the third coefficient for the capacity ratio curve.

Power Ratio Curve

The Power Ratio Curve is a quadratic equation that determines the Ratio of Full Load to Power. The defining equation is:

$$FullLoadtoPowerRatio = C_1 + C_2 AvailToNominalCapRatio + C_3 AvailToNominalCapRatio^2$$

The following three fields contain the coefficients for the quadratic equation.

Field: Coefficient1 of the power ratio curve

This numeric field contains the first coefficient for the power ratio curve.

Field: Coefficient2 of the power ratio curve

This numeric field contains the second coefficient for the power ratio curve.

Field: Coefficient3 of the power ratio curve

This numeric field contains the third coefficient for the power ratio curve.

Full Load Ratio Curve

The Full Load Ratio Curve is a quadratic equation that determines the fraction of full load power. The defining equation is:

$$FracFullLoadPower = C_1 + C_2 PartLoadRatio + C_3 PartLoadRatio^2$$

The following three fields contain the coefficients for the quadratic equation.

Field: Coefficient1 of the full load ratio curve

This numeric field contains the first coefficient for the full load ratio curve.

Field: Coefficient2 of the full load ratio curve

This numeric field contains the second coefficient for the full load ratio curve.

Field: Coefficient3 of the full load ratio curve

This numeric field contains the third coefficient for the full load ratio curve.

Field: Temp Lower Limit Evaporator Outlet

This numeric field contains the lower limit for the evaporator outlet temperature. This temperature acts as a cut off for heat transfer in the evaporator, so that the fluid doesn't get too cold.

```
CHILLER:ELECTRIC,
       \memo This chiller model is the empirical model from the Building Loads
       \memo and System Thermodynamics (BLAST) program.  Chiller performance
       \memo curves are generated by fitting catalog data to third order
       \memo polynomial equations.  Three sets of coefficients are required.
  A1 , \field Chiller Name
  A2 , \field Condenser Type
          \type choice
          \key AIR COOLED
          \key WATER COOLED
  N1 , \field Nominal Capacity
       \units W
  N2 , \field COP
  A3 , \field Plant_Side_Inlet_Node
  A4 , \field Plant_Side_Outlet_Node
  A5 , \field Condenser_Side_Inlet_Node
  A6 , \field Condenser_Side_Outlet_Node
  N3 , \field Minimum Part Load Ratio
       \minimum 0.0
  N4 , \field Maximum Part Load Ratio
       \minimum 0.0
  N5 , \field Opt Part Load Ratio
       \minimum 0.0
  N6 , \field Temp Design Condenser Inlet
       \units C
  N7 , \field Temp Rise Coefficient
  N8 , \field Temp Design Evaporator Outlet
       \units C
  N9, \field Design Condenser Volumetric Water Flow Rate
       \minimum> 0.0
```

```
N10, \field Coefficient1 of the capacity ratio curve
N11, \field Coefficient2 of the capacity ratio curve
N12, \field Coefficient3 of the capacity ratio curve
N13, \field Coefficient1 of the power ratio curve
N14, \field Coefficient2 of the power ratio curve
N15, \field Coefficient3 of the power ratio curve
N16, \field Coefficient1 of the full load ratio curve
N17, \field Coefficient2 of the full load ratio curve
N18, \field Coefficient3 of the full load ratio curve
N19; \field Temp Lower Limit Evaporator Outlet
         \units C
```

An example of this statement in an IDF is:

```
CHILLER:ELECTRIC, Little Chiller,
    WATER COOLED,
    20000,
    2.75,
    Little Chiller Inlet Node, Little Chiller Outlet Node,
    Little Chiller Condenser Inlet Node, Little Chiller Condenser Outlet Node,
    .15,
    1.0,
    .65,
    35.0,
    2.778,
    44,
    .0011,
    0.9949, -0.045954, -0.0013543,
    2.333, -1.975, 0.6121,
    0.03303, 0.6852, 0.2818,
    5;
```

An example of an Air Cooled Chiller:

```
CHILLER:ELECTRIC, Big Chiller,
    AIR COOLED,
    100000,
    2.58,
   Big Chiller Inlet Node, Big Chiller Outlet Node,
   Big Chiller Condenser Inlet Node, Big Chiller Condenser Outlet Node,
    .15,
    1.0,
    .65,
    35.0,
    2.778,
    6.67,
    .000000001,
    0.9949, -0.045954, -0.0013543,
    2.333, -1.975, 0.6121,
    0.03303, 0.6852, 0.2818,
    5;
```

Electric Chiller Outputs

```
HVAC,Average,Electric Chiller Power[W]
HVAC,Sum,Electric Chiller Energy[J]
HVAC,Average,Electric Chiller Evap Heat Trans Rate[W]
HVAC,Sum,Electric Chiller Evap Heat Trans[J]
HVAC,Average,Electric Chiller Evap Water Inlet Temp[C]
HVAC,Average,Electric Chiller Evap Water Outlet Temp[C]
HVAC,Average,Electric Chiller Evap Water Mass Flow Rate[kg/s]
HVAC,Average,Electric Chiller Cond Heat Trans Rate[W]
HVAC,Sum,Electric Chiller Cond Heat Trans[J]
 For water-cooled chillers only:
HVAC,Average,Electric Chiller Cond Water Inlet Temp[C]
HVAC,Average,Electric Chiller Cond Water Outlet Temp[C]
HVAC,Average,Electric Chiller Cond Water Mass Flow Rate[kg/s]
 For air-cooled chillers only:
HVAC,Average,Electric Chiller Cond Air Inlet Temp[C]
```

Chiller:EngineDriven

Field: Chiller Name

This alpha field contains the identifying name for the engine driven chiller.

Field: Condenser Type

This alpha field contains the keyword for the type of condenser, either AIR COOLED, or WATER COOLED.

Field: Nominal Capacity

This numeric field contains the nominal cooling capability of the chiller in Watts.

Field: COP

This numeric field contains the chiller's coefficient of performance.

Field: Plant_Side_Inlet_Node

This alpha field contains the identifying name for the chiller plant side inlet node.

Field: Plant_Side_Outlet_Node

This alpha field contains the identifying name for the chiller plant side outlet node.

Field: Condenser_Side_Inlet_Node

This alpha field contains the identifying name for the chiller condenser side inlet node.

Field: Condenser_Side_Outlet_Node

This alpha field contains the identifying name for the chiller condenser side outlet node.

Field: Minimum Part Load Ratio

This numeric field contains the chiller's minimum part load ratio. The expected range is between 0 and 1.

Field: Maximum Part Load Ratio

This numeric field contains the chiller's maximum part load ratio. This value may exceed 1, but the normal range is between 0 and 1.1.

Field: Opt Part Load Ratio

This numeric field contains the chiller's optimum part load ratio. This is the part load ratio at which the chiller performs at its maximum COP.

Field: Temp Design Condenser Inlet

This numeric field contains the chiller's condenser inlet design temperature in Celsius.

Field: Temp Rise Coefficient

This numeric field contains the chiller's temperature rise coefficient which is defined as the ratio of the required change in condenser water temperature to a given change in chilled water

temperature, which maintains the capacity at the nominal value.. This is calculated as the following ratio:

$$\frac{TCL_{required} - TCL_{rated}}{TEL_{required} - TEL_{rated}}$$

where:

$TCL_{requiredl}$ = Required leaving condenser water outlet temperature to maintain rated capacity

TCL_{rated} = Rated leaving condenser water outlet temperature at rated capacity

$TEL_{required}$ = Required leaving evaporator water outlet temperature to maintain rated capacity

TEL_{rated} = Rated leaving evaporator water outlet temperature at rated capacity

Field: Temp Design Evaporator Outlet

This numeric field contains the chiller's evaporator outlet design temperature in Celsius.

Field: Design Condenser Volumetric Water Flow Rate

This numeric field contains the chiller's design condenser water flow rate in cubic meters per second.

Capacity Ratio Curve

The Capacity Ratio Curve is a quadratic equation that determines the Ratio of Available Capacity to Nominal Capacity. The defining equation is:

$$AvailToNominalCapacityRatio = C_1 + C_2\Delta_{temp} + C_3\Delta_{temp}^2$$

The following three fields contain the coefficients for the quadratic equation.

Field: Coefficient1 of the capacity ratio curve

This numeric field contains the first coefficient for the capacity ratio curve.

Field: Coefficient2 of the capacity ratio curve

This numeric field contains the second coefficient for the capacity ratio curve.

Field: Coefficient3 of the capacity ratio curve

This numeric field contains the third coefficient for the capacity ratio curve.

Power Ratio Curve

The Power Ratio Curve is a quadratic equation that determines the Ratio of Full Load to Power. The defining equation is:

$$FullLoadtoPowerRatio = C_1 + C_2 AvailToNominalCapRatio + C_3 AvailToNominalCapRatio^2$$

The following three fields contain the coefficients for the quadratic equation.

Field: Coefficient1 of the power ratio curve

This numeric field contains the first coefficient for the power ratio curve.

Field: Coefficient2 of the power ratio curve

This numeric field contains the second coefficient for the power ratio curve.

Field: Coefficient3 of the power ratio curve

This numeric field contains the third coefficient for the power ratio curve.

Full Load Ratio Curve

The Full Load Ratio Curve is a quadratic equation that determines the fraction of full load power. The defining equation is:

$$FracFullLoadPower = C_1 + C_2 PartLoadRatio + C_3 PartLoadRatio^2$$

The following three fields contain the coefficients for the quadratic equation.

Field: Coefficient1 of the full load ratio curve

This numeric field contains the first coefficient for the full load ratio curve.

Field: Coefficient2 of the full load ratio curve

This numeric field contains the second coefficient for the full load ratio curve.

Field: Coefficient3 of the full load ratio curve

This numeric field contains the third coefficient for the full load ratio curve.

Field Temp Lower Limit Evaporator Outlet

This numeric field contains the lower limit for the evaporator outlet temperature. This temperature acts as a cut off for heat transfer in the evaporator, so that the fluid doesn't get too cold.

Field: the Shaft Power curve

This alpha field contains the name of the shaft power curve. The curve itself is specified separately using the EnergyPlus Curve Manager. The Shaft Power Curve is a quadratic equation that determines the ratio of shaft power to fuel energy. The defining equation is:

$$ShaftPowerToFuelRatio = C_1 + C_2 RL + C_3 RL^2$$

where RL is the Ratio of Load to Diesel Engine Capacity

Field: the Recovery Jacket Heat curve

This alpha field contains the name of the Recovery Jacket Heat curve. The curve itself is specified separately using the EnergyPlus Curve Manager. The Recovery Jacket Heat Curve is a quadratic equation that determines the ratio of recovery jacket heat to fuel energy. The defining equation is:

$$RecoveryJacketHeatToFuelRatio = C_1 + C_2 RL + C_3 RL^2$$

where RL is the Ratio of Load to Diesel Engine Capacity

Field: the Recovery Lube Heat curve

This alpha field contains the name of the Recovery Lube Heat curve. The curve itself is specified separately using the EnergyPlus Curve Manager. The Recovery Lubricant Heat Curve is a quadratic equation that determines the ratio of recovery lube heat to fuel energy. The defining equation is:

$$RecoveryLubeHeatToFuelRatio = C_1 + C_2 RL + C_3 RL^2$$

where RL is the Ratio of Load to Diesel Engine Capacity

Field: the Total Exhaust Energy curve

This alpha field contains the name of the Total Exhaust Energy curve. The curve itself is specified separately using the EnergyPlus Curve Manager. The Total Exhaust Energy Curve is a quadratic equation that determines the ratio of total exhaust energy to fuel energy. The defining equation is:

$$TotalExhaustToFuelRatio = C_1 + C_2 RL + C_3 RL^2$$

where RL is the Ratio of Load to Diesel Engine Capacity

Field: the Exhaust Temperature curve

This alpha field contains the name of the Exhaust Temperature curve. The curve itself is specified separately using the EnergyPlus Curve Manager. The Exhaust Temperature Curve is a quadratic equation that determines the absolute exhaust temperature. The defining equation is:

$$AbsoluteExhaustTemperature = C_1 + C_2 RL + C_3 RL^2$$

where RL is the Ratio of Load to Diesel Engine Capacity

UA Curve

The UA is an equation that determines the overall heat transfer coefficient for the exhaust gasses with the stack. The heat transfer coefficient ultimately helps determine the exhaust stack temperature. The defining equation is:

$$UAToCapacityRatio = C_1 EngineCapacity^{C_2}$$

The following two fields contain the coefficients for the equation.

Field: Coefficient1 of UA curve

This numeric field contains the first coefficient for the overall heat transfer coefficient curve.

Field: Coefficient2 of UA curve

This numeric field contains the second (exponential) coefficient for the overall heat transfer coefficient curve.

Field: Maximum Exhaust Flow per cooling load

This numeric field contains the maximum exhaust gas mass flow rate per watt of cooling provided by the engine driven chiller

Field: Design Minimum Exhaust temp. (Steam Saturation Temperature)

This numeric field contains the steam saturation temperature in Celsius that would be used to determine the energy recovered from a water jacket heat exchanger on the engine.

Field: fuel Type

This alpha value specifies the type of fuel used in the engine. The fuel type can be DIESEL, GASOLINE, or GAS.

Field: Fuel Heating Value

This numeric field contains the heating value of the fuel used in Watt-hours/Liter.

Field: Design heat recovery water mass flow rate

This numeric field specifies the heat recovery mass flow rate through the engine. The heat recovery loop manager and hot water tan must also be specified if heat energy is to be recovered from the engine driven chiller.

Field: Heat_Recovery_Side_Inlet_Node

This alpha field contains the identifying name for the heat recovery side inlet. If a loop is connected, then the jacket and lubricant heat will be recovered. There is no need for an effectiveness term, since the jacket and lubricant recovered heat energies are the actual recovered energies.

Field: Heat_Recovery_Side_Outlet_Node

This alpha field contains the identifying name for the heat recovery side outlet.

```
CHILLER:ENGINEDRIVEN,
       \memo This chiller model is the empirical model from the Building Loads
       \memo and System Thermodynamics (BLAST) program.  Chiller performance
       \memo curves are generated by fitting catalog data to third order
       \memo polynomial equations.  Three sets of coefficients are required.
  A1 , \field Chiller Name
  A2 , \field Condenser Type
          \type choice
          \key AIR COOLED
          \key WATER COOLED
  N1 , \field Nominal Capacity
       \units W
  N2 , \field COP
  A3 , \field Plant_Side_Inlet_Node
  A4 , \field Plant_Side_Outlet_Node
  A5 , \field Condenser_Side_Inlet_Node
  A6 , \field Condenser_Side_Outlet_Node
  N3 , \field Minimum Part Load Ratio
       \minimum 0.0
  N4 , \field Maximum Part Load Ratio
       \minimum 0.0
  N5 , \field Opt Part Load Ratio
       \minimum 0.0
  N6 , \field Temp Design Condenser Inlet
       \units C
  N7 , \field Temp Rise Coefficient
  N8 , \field Temp Design Evaporator Outlet
       \units C
  N9, \field Design Condenser Volumetric Water Flow Rate
       \units m3/s
  N10, \field Coefficient1 of the capacity ratio curve
  N11, \field Coefficient2 of the capacity ratio curve
  N12, \field Coefficient3 of the capacity ratio curve
  N13, \field Coefficient1 of the power ratio curve
  N14, \field Coefficient2 of the power ratio curve
  N15, \field Coefficient3 of the power ratio curve
  N16, \field Coefficient1 of the full load ratio curve
  N17, \field Coefficient2 of the full load ratio curve
  N18, \field Coefficient3 of the full load ratio curve
  N19, \field Temp Lower Limit Evaporator Outlet
       \units C
```

```
     \Note  Special EngineDriven Chiller Parameters Below
A7, \field the Shaft Power curve
     \type object-list
     \object-list QuadraticCurves
     \note curve = a + b*PLR + c*PLR**2
     \note PLR = Ratio of Evap. heat trans. rate to Nominal capacity
A8, \field the Recovery Jacket Heat curve
     \type object-list
     \object-list QuadraticCurves
     \note curve = a + b*PLR + c*PLR**2
     \note PLR = Ratio of Evap. heat trans. rate to Nominal capacity
A9, \field the Recovery Lube Heat curve
     \type object-list
     \object-list QuadraticCurves
     \note curve = a + b*PLR + c*PLR**2
     \note PLR = Ratio of Evap. heat trans. rate to Nominal capacity
A10, \field the Total Exhaust Energy curve
     \type object-list
     \object-list QuadraticCurves
     \note curve = a + b*PLR + c*PLR**2
     \note PLR = Ratio of Evap. heat trans. rate to Nominal capacity
A11, \field the Exhaust Temperature curve
     \type object-list
     \object-list QuadraticCurves
     \note curve = a + b*PLR + c*PLR**2
     \note PLR = Ratio of Evap. heat trans. rate to Nominal capacity
N20, \field Coefficient1 of UA curve
     \note curve = C1 * Nominal capacity^C2
N21, \field Coefficient2 of UA curve
     \note curve = C1 * Nominal capacity^C2
N22, \field Maximum Exhaust Flow per cooling load
     \units
N23, \field Design Minimum Exhaust temp. (Steam Saturation Temperature)
     \units C
A12 , \field fuel Type
        \type choice
        \key DIESEL
        \key GASOLINE
        \key GAS
N24, \field Fuel Heating Value
     \units KJ/Kg
N25, \field Design heat recovery water mass flow rate
     \units kg/s
A13, \field Heat_Recovery_Side_Inlet_Node
A14; \field Heat_Recovery_Side_Outlet_Node
```

Engine Driven Chiller Outputs

```
HVAC,Average,Chiller Power[W]
HVAC,Average,Chiller Evap Heat Trans Rate[W]
HVAC,Average,Chiller Evap Water Inlet Temp[C]
HVAC,Average,Chiller Evap Water Outlet Temp[C]
HVAC,Average,Chiller Evap Water mass flow rate[kg/s]
HVAC,Average,Chiller Cond Heat Trans Rate[W]
HVAC,Average,Chiller Cond Water Inlet Temp[C]
HVAC,Average,Chiller Cond Water Outlet Temp[C]
HVAC,Average,Chiller Cond Water mass flow rate[kg/s]
```

Chiller:Gas Turbine

This chiller model is the empirical model from the Building Loads and System Thermodynamics (BLAST) program. Chiller performance curves are generated by fitting catalog data to third order polynomial equations. Three sets of coefficients are required.

Field: Chiller Name

This alpha field contains the identifying name for the gas turbine chiller.

Field: Condenser Type

This alpha field contains the keyword for the type of condenser, either AIR COOLED, or WATER COOLED.

Field: Nominal Capacity

This numeric field contains the nominal cooling capability of the chiller in Watts.

Field: COP

This numeric field contains the Chiller's coefficient of performance.

Field: Plant_Side_Inlet_Node

This alpha field contains the identifying name for the gas turbine chiller plant side inlet node.

Field: Plant_Side_Outlet_Node

This alpha field contains the identifying name for the gas turbine chiller plant side outlet node.

Field: Condenser_Side_Inlet_Node

This alpha field contains the identifying name for the gas turbine chiller condenser side inlet node.

Field: Condenser_Side_Outlet_Node

This alpha field contains the identifying name for the gas turbine chiller condenser side outlet node.

Field: Minimum Part Load Ratio

This numeric field contains the gas turbine chiller's minimum part load ratio. The expected range is between 0 and 1.

Field: Maximum Part Load Ratio

This numeric field contains the gas turbine chiller's maximum part load ratio. This value may exceed 1, but the normal range is between 0 and 1.1.

Field: Opt Part Load Ratio

This numeric field contains the gas turbine chiller's optimum part load ratio. This is the part load ratio at which the chiller performs at its maximum COP.

Field: Temp Design Condenser Inlet

This numeric field contains the gas turbine chiller's condenser inlet design temperature in Celsius.

Field: Temp Rise Coefficient

This numeric field contains the gas turbine chiller's temperature rise coefficient which is defined as the ratio of the required change in condenser water temperature to a given change in chilled water temperature, which maintains the capacity at the nominal value.. This is calculated as the following ratio:

$$\frac{TCL_{required} - TCL_{rated}}{TEL_{required} - TEL_{rated}}$$

where:

$TCL_{requiredl}$ = Required leaving condenser water outlet temperature to maintain rated capacity

TCL_{rated} = Rated leaving condenser water outlet temperature at rated capacity

$TEL_{required}$ = Required leaving evaporator water outlet temperature to maintain rated capacity

TEL_{rated} = Rated leaving evaporator water outlet temperature at rated capacity

Field: Temp Design Evaporator Outlet

This numeric field contains the gas turbine chiller's evaporator outlet design temperature in Celsius.

Field: Design Condenser Volumetric Water Flow Rate

This numeric field contains the gas turbine chiller's design condenser water flow rate in cubic meters per second.

Capacity Ratio Curve

The Capacity Ratio Curve is a quadratic equation that determines the Ratio of Available Capacity to Nominal Capacity. The defining equation is:

$$AvailToNominalCapacityRatio = C_1 + C_2\Delta_{temp} + C_3\Delta_{temp}^2$$

The following three fields contain the coefficients for the quadratic equation.

Field: Coefficient1 of the capacity ratio curve

This numeric field contains the first coefficient for the capacity ratio curve.

Field: Coefficient2 of the capacity ratio curve

This numeric field contains the second coefficient for the capacity ratio curve.

Field: Coefficient3 of the capacity ratio curve

This numeric field contains the third coefficient for the capacity ratio curve.

Power Ratio Curve

The Power Ratio Curve is a quadratic equation that determines the Ratio of Full Load to Power. The defining equation is:

$$FullLoadtoPowerRatio = C_1 + C_2 AvailToNominalCapRatio + C_3 AvailToNominalCapRatio^2$$

The following three fields contain the coefficients for the quadratic equation.

Field: Coefficient1 of the power ratio curve

This numeric field contains the first coefficient for the power ratio curve.

Field: Coefficient2 of the power ratio curve

This numeric field contains the second coefficient for the power ratio curve.

Field: Coefficient3 of the power ratio curve

This numeric field contains the third coefficient for the power ratio curve.

Full Load Ratio Curve

The Full Load Ratio Curve is a quadratic equation that determines the fraction of full load power. The defining equation is:

$$FracFullLoadPower = C_1 + C_2 PartLoadRatio + C_3 PartLoadRatio^2$$

The following three fields contain the coefficients for the quadratic equation.

Field: Coefficient1 of the full load ratio curve

This numeric field contains the first coefficient for the full load ratio curve.

Field: Coefficient2 of the full load ratio curve

This numeric field contains the second coefficient for the full load ratio curve.

Field: Coefficient3 of the full load ratio curve

This numeric field contains the third coefficient for the full load ratio curve.

Field: Temp Lower Limit Evaporator Outlet

This numeric field contains the lower limit for the evaporator outlet temperature. This temperature acts as a cut off for heat transfer in the evaporator, so that the fluid doesn't get too cold.

Fuel Input Curve

The Fuel Input Curve is a polynomial equation that determines the Ratio of Fuel Input to Energy Output. The equation combines both the Fuel Input Curve Coefficients and the Temperature Based Fuel Input Curve Coefficients. The defining equation is:

$$FuelEnergyInput = PLoad * (FIC_1 + FIC_2 RLoad + FIC_3 RLoad^2) * (TBFIC_1 + TBFIC_2 AT_{air} + TBFIC_3 AT_{air}^2)$$

where FIC represents the Fuel Input Curve Coefficients, TBFIC represents the Temperature Based Fuel Input Curve Coefficients, Rload is the Ratio of Load to Gas Turbine Engine Capacity, and AT_{air} is the difference between the current ambient and design ambient temperatures.

The following three fields contain the coefficients for the fuel input curve.

Field: Coefficient1 of Fuel Input curve

This numeric field contains the first coefficient for the Fuel Input Curve.

Field: Coefficient2 of Fuel Input curve

This numeric field contains the second coefficient for the Fuel Input Curve.

Field: Coefficient3 of Fuel Input curve

This numeric field contains the third coefficient for the Fuel Input Curve.

The following three fields contain the coefficients for the temperature based fuel input curve.

Field: Coefficient1 of Temperature Based Fuel Input curve

This numeric field contains the first coefficient for the Temperature Based Fuel Input Curve.

Field: Coefficient2 of Temperature Based Fuel Input curve

This numeric field contains the second coefficient for the Temperature Based Fuel Input Curve.

Field: Coefficient3 of Temperature Based Fuel Input curve

This numeric field contains the third coefficient for the Temperature Based Fuel Input Curve.

Exhaust Flow Curve

The Exhaust Flow Curve is a quadratic equation that determines the Ratio of Exhaust Gas Flow Rate to Engine Capacity. The defining equation is:

$$ExhaustFlowRate = GTCapacity * (C_1 + C_2 AT_{air} + C_3 AT_{air}^2)$$

where GTCapacity is the Gas Turbine Engine Capacity, and AT_{air} is the difference between the current ambient and design ambient temperatures.

Field: Coefficient1 of Exhaust Flow curve

This numeric field contains the first coefficient for the Exhaust Flow Curve.

Field: Coefficient2 of Exhaust Flow curve

This numeric field contains the second coefficient for the Exhaust Flow Curve.

Field: Coefficient3 of Exhaust Flow curve

This numeric field contains the third coefficient for the Exhaust Flow Curve.

Exhaust Gas Temperature Curve

The Exhaust Gas Temperature Curve is a polynomial equation that determines the Exhaust Gas Temperature. The equation combines both the Exhaust Gas Temperature Curve Coefficients (Based on the Part Load Ratio) and the (Ambient) Temperature Based Exhaust Gas Temperature Curve Coefficients. The defining equation is:

$$ExhaustTemperature = (C_1 + C_2 RLoad + C_3 RLoad^2) * (TBC_1 + TBC_2 AT_{air} + TBC_3 AT_{air}^2) - 273.15$$

where C represents the Exhaust Gas Temperature Curve Coefficients, TBC are the Temperature Based Exhaust Gas Temperature Curve Coefficients, RLoad is the Ratio of Load to Gas Turbine Engine Capacity, and AT_{air} is the difference between the actual ambient and design ambient temperatures.

Field: Coefficient1 of Exhaust Gas Temperature curve

This numeric field contains the first coefficient for the Exhaust Gas Temperature Curve.

Field: Coefficient2 of Exhaust Gas Temperature curve

This numeric field contains the second coefficient for the Exhaust Gas Temperature Curve.

Field: Coefficient3 of Exhaust Gas Temperature curve

This numeric field contains the third coefficient for the Exhaust Gas Temperature Curve.

Field: Coefficient1 of Temperature Based Exhaust Gas Temperature curve

This numeric field contains the first coefficient for the Temperature Based Exhaust Gas Temperature Curve.

Field: Coefficient2 of Temperature Based Exhaust Gas Temperature curve

This numeric field contains the second coefficient for the Temperature Based Exhaust Gas Temperature Curve.

Field: Coefficient3 of Temperature Based Exhaust Gas Temperature curve

This numeric field contains the third coefficient for the Temperature Based Exhaust Gas Temperature Curve.

Recovery Lubricant Heat Curve

The Recovery Lubricant Heat Curve is a quadratic equation that determines the recovery lube energy. The defining equation is:

$$RecoveryLubeEnergy = PLoad * (C_1 + C_2 RL + C_3 RL^2)$$

where Pload is the engine load and RL is the Ratio of Load to Gas Turbine Engine Capacity

The following three fields contain the coefficients for the quadratic equation.

Field: Coefficient1 of Recovery Lube Heat curve

This numeric field contains the first coefficient for the Recovery Lube Heat curve.

Field: Coefficient2 of Recovery Lube Heat curve

This numeric field contains the second coefficient for the Recovery Lube Heat curve.

Field: Coefficient3 of Recovery Lube Heat curve

This numeric field contains the third coefficient for the Recovery Lube Heat curve.

UA Curve

The UA is an equation that determines the overall heat transfer coefficient for the exhaust gasses with the stack. The heat transfer coefficient ultimately helps determine the exhaust stack temperature. The defining equation is:

$$UAToCapacityRatio = C_1 GasTurbineEngineCapacity^{C_2}$$

The following two fields contain the coefficients for the equation.

Field: Coefficient1 of UA curve

This numeric field contains the first coefficient for the overall heat transfer coefficient curve.

Field: Coefficient2 of UA curve

This numeric field contains the second (exponential) coefficient for the overall heat transfer coefficient curve.

Field: Gas Turbine Engine Capacity

This numeric field contains the capacity of the gas turbine engine in watts.

Field: Maximum Exhaust Flow per KW of Power Output

This numeric field contains the maximum exhaust gas mass flow rate per kilowatt of power out.

Field: Design Steam Saturation Temperature

This numeric field contains the design steam saturation temperature in Celsius.

Field: Fuel Heating Value

This numeric field contains the heating value of the diesel fuel used in Watt-hours/Liter.

Field: Heat_Recovery_Side_Inlet_Node

This alpha field contains the identifying name for the heat recovery side inlet. If a loop is connected, then the jacket and lubricant heat will be recovered. There is no need for an effectiveness term, since the jacket and lubricant recovered heat energies are the actual recovered energies.

Field: Heat_Recovery_Side_Outlet_Node

This alpha field contains the identifying name for the heat recovery side outlet.

```
CHILLER:GAS TURBINE,
       \memo This chiller model is the empirical model from the Building Loads
       \memo and System Thermodynamics (BLAST) program.  Chiller performance
       \memo curves are generated by fitting catalog data to third order
       \memo polynomial equations.  Three sets of coefficients are required.
  A1 , \field Chiller Name
  A2 , \field Condenser Type
          \type choice
          \key AIR COOLED
          \key WATER COOLED
  N1 , \field Nominal Capacity
       \units W
  N2 , \field COP
  A3 , \field Plant_Side_Inlet_Node
  A4 , \field Plant_Side_Outlet_Node
  A5 , \field Condenser_Side_Inlet_Node
  A6 , \field Condenser_Side_Outlet_Node
  N3 , \field Minimum Part Load Ratio
  N4 , \field Maximum Part Load Ratio
  N5 , \field Opt Part Load Ratio
  N6 , \field Temp Design Condenser Inlet
       \units C
  N7 , \field Temp Rise Coefficient
  N8 , \field Temp Design Evaporator Outlet
       \units C
  N9, \field Design Condenser Volumetric Water Flow Rate
       \units m3/sec
  N10, \field Coefficient1 of the capacity ratio curve
  N11, \field Coefficient2 of the capacity ratio curve
  N12, \field Coefficient3 of the capacity ratio curve
  N13, \field Coefficient1 of the power ratio curve
  N14, \field Coefficient2 of the power ratio curve
  N15, \field Coefficient3 of the power ratio curve
  N16, \field Coefficient1 of the full load ratio curve
  N17, \field Coefficient2 of the full load ratio curve
  N18, \field Coefficient3 of the full load ratio curve
  N19, \field Temp Lower Limit Evaporator Outlet
       \units C
```

```
\Note  Special Gas Turbine Chiller Parameters Below
\
  N20, \field Coefficient1 of Fuel Input curve
  N21, \field Coefficient2 of Fuel Input curve
  N22, \field Coefficient3 of Fuel Input curve
  N23, \field Coefficient1 of Temperature Based Fuel Input curve
  N24, \field Coefficient2 of Temperature Based Fuel Input curve
  N25, \field Coefficient3 of Temperature Based Fuel Input curve
  N26, \field Coefficient1 of Exhaust Flow curve
  N27, \field Coefficient2 of Exhaust Flow curve
  N28, \field Coefficient3 of Exhaust Flow curve
  N29, \field Coefficient1 of Exhaust Gas Temperature curve
  N30, \field Coefficient2 of Exhaust Gas Temperature curve
  N31, \field Coefficient3 of Exhaust Gas Temperature curve
  N32, \field Coefficient1 of Temperature Based Exhaust Gas Temperature curve
  N33, \field Coefficient2 of Temperature Based Exhaust Gas Temperature curve
  N34, \field Coefficient3 of Temperature Based Exhaust Gas Temperature curve
  N35, \field Coefficient1 of Recovery Lube Heat curve
  N36, \field Coefficient2 of Recovery Lube Heat curve
  N37, \field Coefficient3 of Recovery Lube Heat curve
  N38, \field Coefficient1 of UA curve
  N39, \field Coefficient2 of UA curve
  N40, \field Gas Turbine Engine Capacity
       \units W
  N41, \field Maximum Exhaust Flow per KW of Power Output
  N42, \field Design Steam Saturation Temperature
       \units C
  N43, \field Fuel Heating Value
       \units W-hours/L
  A7 , \field Heat_Recovery_Side_Inlet_Node
  A8 ; \field Heat_Recovery_Side_Outlet_Node
```

An example of this statement in an IDF is:

```
CHILLER:GAS TURBINE, Big Chiller,
        WATER COOLED,
        50000,
        2.75,
        Big Chiller Inlet Node, Big Chiller Outlet Node,
        Big Chiller Condenser Inlet Node, Big Chiller Condenser Outlet Node,
        .15,
        1.0,
        .65,
        35.0,
        2.778,
        44,
        .0011,
        0.9949, -0.045954, -0.0013543,    !Capacity Ratio Coeffs
        2.333, -1.975, 0.6121,            !Power Ratio Coeffs
        0.03303, 0.6852, 0.2818,          !Full Load Ratio Coeffs
        5,
        9.41, -9.48, 4.32,                !PLR Based Fuel Input Coeffs
        1.0044, -0.0008, 0,               !Temperature Based Fuel Input Coeffs
        15.63518363, -0.03059999, -0.0002,!Exhaust Flow Coeffs
        916.992, 307.998, 79.992,         !PLR Based Exhaust Gas Temp Coeffs
        1.005, 0.0018, 0,                 !Temp Based Exhaust Gas Temp Coeffs
        0.223, -0.4, 0.2286,              !Recovery Lube Heat Coeffs
        0.01907045, 0.9,                  !UA Coeffs
        50000,                            !Gas Turbine Engine Capacity
        11.72,                            !Maximum Exhaust Flow per KW Diesel Power Out
        150,                              !Design Steam Saturation Temperature (C)
        16000,                            ! Fuel Heating Value (W-hours/L)
        Big Chiller Heat Rec Inlet Node, Big Chiller Heat Rec Outlet Node;
```

Gas Turbine Chilller Outputs

```
HVAC,Average,Chiller Power[W]
HVAC,Average,Chiller Evap Heat Trans Rate[W]
HVAC,Average,Chiller Evap Water Inlet Temp[C]
```

```
HVAC,Average,Chiller Evap Water Outlet Temp[C]
HVAC,Average,Chiller Evap Water mass flow rate[kg/s]
HVAC,Average,Chiller Cond Heat Trans Rate[W]
HVAC,Average,Chiller Cond Water Inlet Temp[C]
HVAC,Average,Chiller Cond Water Outlet Temp[C]
HVAC,Average,Chiller Cond Water mass flow rate[kg/s]
```

Chiller:Gas Absorption

This chiller is a direct fired gas absorption chiller-heater which is modeled using performance curves similar to the equivalent chiller in DOE-2.1E. This type of chiller is unusual for EnergyPlus, because it may be used in the same plant on both a chilled water supply branch and a hot water supply branch. The chiller has six node connections for chilled water, condenser water, and hot water, and can provide simultaneous heating and cooling. During simultaneous opearation, the heating capacity is reduced as the cooling load increases (for more details see below).

Field: Chiller Name

This alpha field contains the identifying name for the chiller.

Field: Nominal Cooling Capacity

This numeric field contains the nominal cooling capability of the chiller in Watts.

Field: Heating to Cooling Capacity Ratio

A positive fraction that represents the ratio of the heating capacity divided by the cooling capacity at rated conditions. The default is 0.8.

Field: Fuel Input to Cooling Output Ratio

A positive fraction that represents the ratio of the instantaneous cooling fuel used divided by the cooling capacity at rated conditions. The default is 0.97.

Field: Fuel Input to Heating Output Ratio

A positive fraction that represents the ratio of the instantaneous heating fuel used divided by the nominal heating capacity. The default is 1.25.

Field: Electric Input to Cooling Output Ratio

A positive fraction that represents the ratio of the instantaneous electricity used divided by the cooling capacity at rated conditions. If the chiller is both heating and cooling only the greater of the computed cooling and heating electricity is used. The default is 0.01.

Field: Electric Input to Heating Output Ratio

A positive fraction that represents the ratio of the instantaneous electricity used divided by the nominal heating capacity. If the chiller is both heating and cooling, the greater of the cooling electricity and heating eletricity is used. The default is 0.0.

Field: Chilled Water Side Inlet Node

This alpha field contains the identifying name for the chiller chilled water side inlet node. This node name must be the same as the inlet node name for the chilled water supply branch on which this chiller is placed.

Field: Chilled Water Side Outlet Node

This alpha field contains the identifying name for the chiller chilled water side outlet node.

Field: Condenser Side Inlet Node

This alpha field contains the identifying name for the chiller condenser side inlet node.

Field: Condenser Side Outlet Node

This alpha field contains the identifying name for the chiller condenser side outlet node.

Field: Hot Water Side Inlet Node

This alpha field contains the identifying name for the chiller-heater hot water side inlet node. This node name must be the same as the inlet node name for the hot water supply branch on which this chiller-heater is placed.

Field: Hot Water Side Outlet Node

This alpha field contains the identifying name for the chiller-heater hot water side outlet node.

Field: Minimum Part Load Ratio

A positive fraction that represents the minimum cooling or heating output possible when operated continually at rated temperature conditions divided by the available cooling or heating capacity at those same conditions. If the load on the chiller is below this fraction, the chiller will cycle. If the chiller is simultaneously heating and cooling, the greater part load ratio will be used. The default is 0.1.

Field: Maximum Part Load Ratio

A positive fraction that represents the maximum cooling or heating output possible when operated continually at rated temperature conditions divided by the available cooling or heating capacity at those same conditions. If greater than 1.0, the chiller is typically thought of as capable of being overloaded. The default is 1.0.

Field: Optimum Part Load Ratio

A positive fraction that represents the optimum cooling or heating output possible when operated continually at rated temperature conditions divided by the available cooling or heating capacity at those same conditions. It represents the most desirable operating point for the chiller. The default is 1.0.

Field: Design Entering Condenser Water Temperature

The temperature in degrees C of the water entering the condenser of the chiller when operating at design conditions. This is usually based on the temperature delivered by the cooling tower in a water cooled application. The default is 29C

Field: Design Leaving Chilled Water Temperature

The temperature in degrees C of the water leaving the evaporator of the chiller when operating at design conditions; also called the chilled water supply temperature or leaving chilled water temperature. The default is 7C.

Field: Design Condenser Volumetric Water Flow Rate

The water flow rate at design conditions through the condenser in m^3/s.

Field: Cooling Capacity Function of Temperature Curve

The CoolCapfT curve represents the fraction of the cooling capacity of the chiller as it varies by temperature. The curve is normalized so that at design conditions the value of the curve should be

1.0. The curve is usually a biquadratic or bilinear curve with the input variables being the leaving chilled water temperature and either the entering or leaving condenser water temperature (see *Temperature Curve Input Variable* below). The available cooling capacity is computed as follows:

*AvailableCoolingCapacity = NominalCoolingCapacity * CoolCapFTCurve(LeavingChilledWaterTemp, SpecifiedCondenserTemp)*

Field: Fuel-Input-to Cooling Output Ratio Function of Temperature Curve

The CFIRfT curve represents the fraction of the fuel input to the chiller at full load as it varies by temperature. The curve is normalized so that at design conditions the value of the curve should be 1.0. The curve is usually a biquadratic or bilinear curve with the input variables being the leaving chilled water temperature and either the entering or leaving condenser water temperature (see *Temperature Curve Input Variable* below).

Field: Fuel-Input-to Cooling Output Ratio Function of Part Load Ratio Curve

The CFIRfPLR curve represents the fraction of the fuel input to the chiller as the load the chiller varies but the operating temperatures remain at the design values. The curve is normalized so that at full load the value of the curve should be 1.0. The curve is usually linear or quadratic. The cooling fuel input to the chiller is computed as follows:

*CoolFuelInput = AvailableCoolingCapacity * FuelInputToCoolingOutputRatio * FuelCoolFTCurve(LeavingChilledWaterTemp, SpecifiedCondenserTemp) * FuelCoolFPLRCurve(CoolPartLoadRatio)*

Field: Electric-Input-to Cooling Output Ratio Function of Temperature Curve

The ElecCoolFT curve represents the fraction of the electricity to the chiller at full load as it varies by temperature. The curve is normalized so that at design conditions the of the curve should be 1.0. The curve is usually a biquadratic or bilinear curve with the input variables being the leaving chilled water temperature and either the entering or leaving condenser water temperature (see *Temperature Curve Input Variable* below).

Field: Electric-Input-to Cooling Output Ratio Function of Part Load Ratio Curve

The ElecCoolFPLR curve represents the fraction of the electricity to the chiller as the load on the chiller varies but This operating temperatures remain at the design values. The curve is normalized so that at full load the value of the curve should be 1.0. The curve is usually linear or quadratic. The cooling electric input to the chiller is computed as follows:

*CoolElectricPower = NominalCoolingCapacity * ElectricInputToCoolingOutputRatio * OnTimeFraction * ElecCoolFTCurve (LeavingChilledWaterTemp, SpecifiedCondenserTemp) * ElecCoolFPLRCurve(CoolPartLoadRatio)*

Field: Heating Capacity Function of Cooling Capacity Curve

The HeatCapFCool curve represents how the heating capacity of the chiller varies with cooling capacity when the chiller is simultaeous heating and cooling. The curve is normalized so an input of 1.0 represents the nominal cooling capacity and an output of 1.0 represents the full heating capacity (see the Heating to cooling capacity ratio input) The curve is usually linear or quadratic. The available heating capacity is computed as follows:

*AvailableHeatingCapacity = NominalCoolingCapacity * HeatToCoolCapacityRatio * HeatCapFCoolCurve (CoolPartLoadRatio)*

Field: Fuel Input to Heat Output Ratio During Heating Only Function

When the chiller is operating as only a heater, the curve is used to represent the fraction of fuel used as the heating load varies. It is normalized so that a value of 1.0 is the full available heating capacity. The curve is usually linear or quadratic and will probably be similar to a boiler curve for most chillers.

*HeatFuelUseRate = AvailableHeatingCapacity * FuelInputToCoolingOutputRatio * lFuelHeatFHPLRCurve (HeatPartLoadRatio)*

Field: Temperature Curve Input Variable

This field sets the second independent variable in the three temperature dependent performance curves to either the leaving or entering condenser water temperature. Manufacturers express the performance of their chillers using either the leaving condenser water temperature (to the tower) or the entering condenser water temperature (from the tower). Valid choices for this field are: LEAVING-CONDENSER or ENTERING-CONDENSER. It is important that the performance curves and this field are consistent with each other. The default is ENTERING-CONDENSER.

Field: Condenser Type

The condenser can either be air cooled or connected to a cooling tower. This alpha field contains the keyword for the type of condenser, either AIR COOLED, or WATER COOLED. The default is WATER-COOLED.

Field: Chilled Water Lower Limit Temperature

The chilled water supply temperature in degrees C below which the chiller will shut off. The default is 2C

Field: Fuel Heating Value

The fuel heating value in J/m3. *This field is not currently used*.

```
CHILLER:GAS ABSORPTION,
          \note Direct fired gas absorption chiller using performance curves similar to DOE-2
  A1   ,  \field Chiller Name
! Capacities
  N1   ,  \field Nominal Cooling Capacity
            \units W
  N2   ,  \field Heating to cooling capacity ratio
            \note A positive fraction that represents the ratio of the
            \note heating capacity divided by the cooling capacity at rated conditions.
            \minimum  0
            \default  0.8
```

```
! Efficiencies
  N3   ,  \field Fuel Input to Cooling Output Ratio
            \note The positive fraction that represents the ratio of the
            \note instantaneous fuel used divided by the cooling capacity at rated conditions.
            \minimum> 0
            \default  0.97
  N4   ,  \field Fuel Input to Heating Output Ratio
            \note The positive fraction that represents the ratio of the
            \note instantaneous fuel used divided by the nominal heating capacity.
            \minimum  0
            \default  1.25
  N5   ,  \field Electric Input to Cooling Output Ratio
            \note The positive fraction that represents the ratio of the
            \note instantaneous electricity used divided by the cooling capacity at rated conditions.
            \note If the chiller is both heating and cooling only the cooling electricity is used.
            \minimum  0
            \default  0.01
  N6   ,  \field Electric Input to Heating Output Ratio
            \note The positive fraction that represents the ratio of the
            \note instantaneous electricity used divided by the nominal heating capacity.
            \note If the chiller is both heating and cooling only the cooling electricity is used.
            \minimum  0
            \default  0
! Connections
  A2   ,  \field Chilled Water Side Inlet Node
  A3   ,  \field Chilled Water Side Outlet Node
  A4   ,  \field Condenser Side Inlet Node
  A5   ,  \field Condenser Side Outlet Node
  A6   ,  \field Hot Water Side Inlet Node
  A7   ,  \field Hot Water Side Outlet Node
! Part Load Ratio
  N7   ,  \field Minimum Part Load Ratio
            \note The positive fraction that represents the minimum cooling output possible when
            \note operated continually at rated temperature conditions divided by the nominal
            \note cooling capacity at those same conditions.  If the load on the chiller is below
            \note this fraction the chiller will cycle.
            \minimum> 0
            \default  0.1
  N8   ,  \field Maximum Part Load Ratio
            \note The positive fraction that represents the maximum cooling output possible at
            \note rated temperature conditions divided by the nominal cooling capacity at those
            \note same conditions.  If greater than 1.0, the chiller is typically thought of as
            \note capable of being overloaded.
            \minimum  0.5
            \default  1.0
  N9   ,  \field Optimum Part Load Ratio
            \note The positive fraction that represents the optimal cooling output at rated
            \note temperature conditions divided by the nominal cooling capacity at those same
            \note conditions.  It represents the most desirable operating point for the chiller.
            \minimum> 0
            \default  1.0
! Design Conditions
  N10  ,  \field Design Entering Condenser Water Temperature
            \note The temperature of the water entering the condenser of the chiller when
            \note operating at design conditions.  This is usually based on the temperature
            \note delivered by the cooling tower in a water cooled application.
            \default 29
            \units C
  N11  ,  \field Design Leaving Chilled Water Temperature
            \note The temperature of the water leaving the evaporator of the chiller when
            \note operating at design conditions also called the chilled water supply temperature
            \note or leaving chilled water temperature.
            \default 7
            \units C
  N12  ,  \field Design Condenser Volumetric Water Flow Rate
            \note The water flow rate at design conditions through the condenser.
            \units m3/s
```

```
! Performance Curve References
  A8   ,  \field Cooling Capacity Function of Temperature Curve
            \note The CoolCapFT curve represents the fraction of the cooling capacity of the chiller as it
            \note varies by temperature.  The curve is normalized so that at design conditions the
            \note value of the curve should be 1.0.  The curve is usually a biquadratic or bilinear
            \note curve with the input variables being the leaving chilled water temperature and either
            \note the entering or leaving condenser water temperature.
  A9   ,  \field Fuel Input to Cooling Output Ratio Function of Temperature Curve
            \note The curve represents the fraction of the fuel input to the chiller at full load as
            \note it varies by temperature.  The curve is normalized so that at design conditions the
            \note value of the curve should be 1.0.  The curve is usually a biquadratic or bilinear
            \note curve with the input variables being the leaving chilled water temperature and either
            \note the entering or leaving condenser water temperature.
  A10  ,  \field Fuel Input to Cooling Output Ratio Function of Part Load Ratio Curve
            \note The curve represents the fraction of the fuel input to the chiller as the load on
            \note the chiller varies but the operating temperatures remain at the design values.
            \note The curve is normalized so that at full load the value of the curve should be 1.0.
            \note The curve is usually linear or quadratic.
  A11  ,  \field Electric Input to Cooling Output Ratio Function of Temperature Curve
            \note The curve represents the fraction of the electricity to the chiller at full load as
            \note it varies by temperature.  The curve is normalized so that at design conditions the
            \note value of the curve should be 1.0.  The curve is usually a biquadratic or bilinear
            \note curve with the input variables being the leaving chilled water temperature and either
            \note the entering or leaving condenser water temperature.
  A12  ,  \field Electric Input to Cooling Output Ratio Function of Part Load Ratio Curve
            \note The curve represents the fraction of the electricity to the chiller as the load on
            \note the chiller varies but the operating temperatures remain at the design values.
            \note The curve is normalized so that at full load the value of the curve should be 1.0.
            \note The curve is usually linear or quadratic.
  A13  ,  \field Heating Capacity Function of Cooling Capacity Curve
            \note The curve represents how the heating capacity of the chiller varies with cooling
            \note capacity when the chiller is simultaeous heating and cooling.  The curve is normalized
            \note so an input of 1.0 represents the nominal cooling capacity and an output of 1.0
            \note represents the full heating capacity (see the Heating to cooling capacity ratio input)
            \note The curve is usually linear or quadratic.
  A14  ,  \field Fuel Input to Heat Output Ratio During Heating Only Function
            \note When the chiller is operating as only a heater, this curve is used to represent the
fraction
            \note of fuel used as the heating load varies.  It is normalized so that a value of 1.0 is
            \note the full heating capacity.  The curve is usually linear or quadratic and will probably
            \note be similar to a boiler curve for most chillers.
  A15  ,  \field Temperature Curve Input Variable
            \type choice
            \key LEAVING-CONDENSER
            \key ENTERING-CONDENSER
            \default ENTERING-CONDENSER
            \note Sets the second independent variable in the three temperature dependent performance
curves
            \note to either the leaving or entering condenser water temperature.  Manufacturers express
            \note the performance of their chillers using either the leaving condenser water temperature
(to
            \note the tower) or the entering condenser water temperature (from the tower).
! Other Parameters
  A16  ,  \field Condenser Type
            \note The condenser can either be air cooled or connected to a cooling tower.
            \type choice
            \key AIR-COOLED
            \key WATER-COOLED
            \default WATER-COOLED
  N13  ,  \field Chilled Water Lower Limit Temperature
            \note The chilled water supply temperature below which the chiller
            \note will shut off.
            \units C
            \default 2.0
  N14  ;  \field Fuel Heating Value
            \note Not currently used.
            \units J/m3
```

An example of this statement in an IDF is:

```
CHILLER:GAS ABSORPTION,
    Big Chiller,             !- Chiller Name
    100000,                  !- Nominal Cooling Capacity {W}
    0.8,                     !- Heating to cooling capacity ratio
    0.97,                    !- Fuel Input to Cooling Output Ratio
    1.25,                    !- Fuel Input to Heating Output Ratio
    0.01,                    !- Electric Input to Cooling Output Ratio
    0.005,                   !- Electric Input to Heating Output Ratio
    Big Chiller Inlet Node,  !- Chilled Water Side Inlet Node
    Big Chiller Outlet Node, !- Chilled Water Side Outlet Node
    Big Chiller Condenser Inlet Node,
                             !- Condenser Side Inlet Node
    Big Chiller Condenser Outlet Node,
                             !- Condenser Side Outlet Node
    Big Chiller Heat Inlet Node,
                             !- Hot Water Side Inlet Node
    Big Chiller Heat Outlet Node,
                             !- Hot Water Side Outlet Node
    0.000001,                !- Minimum Part Load Ratio
    1,                       !- Maximum Part Load Ratio
    0.6,                     !- Optimum Part Load Ratio
    29,                      !- Design Entering Condenser Water Temperature {C}
    7,                       !- Design Leaving Chilled Water Temperature {C}
    50,                      !- Design Condenser Volumetric Water Flow Rate {m3/s}
    GasAbsFlatBiQuad,        !- Cooling Capacity Function of Temperature Curve
    GasAbsFlatBiQuad,        !- Fuel Input to Cooling Output Ratio Function of Temperature Curve
    GasAbsLinearQuad,        !- Fuel Input to Cooling Output Ratio Function of Part Load Ratio Curve
    GasAbsFlatBiQuad,        !- Electric Input to Cooling Output Ratio Function of Temperature Curve
    GasAbsFlatQuad,          !- Electric Input to Cooling Output Ratio Function of Part Load Ratio Curve
    GasAbsInvLinearQuad,     !- Heating Capacity Function of Cooling Capacity Curve
    GasAbsFlatQuad,          !- Fuel Input to Heat Output Ratio During Heating Only Function
    ENTERING-CONDENSER,      !- Temperature Curve Input Variable
    WATER-COOLED,            !- Condenser Type
    2,                       !- Chilled Water Lower Limit Temperature {C}
    10;                      !- Fuel Heating Value {J/m3}
```

Gas Absorption Chiller Outputs

```
HVAC,Average,GasAbs Cooling Load[W]
HVAC,Sum,GasAbs Cooling Energy[J]
HVAC,Average,GasAbs Heating Load[W]
HVAC,Sum,GasAbs Heating Energy[J]
HVAC,Average,GasAbs Tower Load[W]
HVAC,Sum,GasAbs Tower Energy[J]
HVAC,Average,GasAbs Fuel Use Rate[W]
HVAC,Sum,GasAbs Fuel Energy[J]
HVAC,Average,GasAbs Cool Fuel Use Rate[W]
HVAC,Sum,GasAbs Cool Fuel Energy[J]
HVAC,Average,GasAbs Heat Fuel Use Rate[W]
HVAC,Sum,GasAbs Heat Fuel Energy[J]
HVAC,Average,GasAbs Electric Power[W]
HVAC,Sum,GasAbs Electric Energy[J]
HVAC,Average,GasAbs Cool Electric Power[W]
HVAC,Sum,GasAbs Cool Electric Energy[J]
HVAC,Average,GasAbs Heat Electric Power[W]
HVAC,Sum,GasAbs Heat Electric Energy[J]
HVAC,Average,GasAbs Chill Return Temp[C]
HVAC,Average,GasAbs Chill Supply Temp[C]
HVAC,Average,GasAbs Chill Water Flow Rate[kg/s]
HVAC,Average,GasAbs Entering Cond Temp[C]
HVAC,Average,GasAbs Leaving Cond Temp[C]
HVAC,Average,GasAbs Cond Water Flow Rate[kg/s]
HVAC,Average,GasAbs Hot Water Return Temp[C]
HVAC,Average,GasAbs Hot Water Supply Temp[C]
HVAC,Average,GasAbs Hot Water Flow Rate[kg/s]
HVAC,Average,GasAbs Part Load Ratio
HVAC,Average,GasAbs Cooling Capacity[W]
```

```
HVAC,Average,GasAbs Heating Capacity[W]
HVAC,Average,GasAbs Fraction of Period Running
```

Boiler: Simple

The boiler model provides a first order approximation of performance for fuel oil, gas and electric boilers. Boiler performance is based on a "theoretical" boiler efficiency (overall efficiency at design operating conditions) and a single quadratic fuel use/ part load ratio curve. This single curve accounts for all combustion inefficiencies and stack losses.

```
BOILER:SIMPLE,
       \memo This boiler model is an adaptation of the empirical model from the Building
       \memo Loads and System Thermodynamics (BLAST) program.  Boiler performance
       \memo curves are generated by fitting catalog data to third order
       \memo polynomial equations.  A constant efficiency boiler is modeled by setting
       \memo the fuel use coefficients as follows: N9=1, N10=0, N11=0
  A1 , \field Boiler Name
  A2 , \field Fuel Type
       \type choice
       \key FUEL OIL
       \key GAS
       \key ELECTRIC
  N1 , \field Nominal capacity
       \units W
  N2 , \field Theoretical Boiler Efficiency
       \type real
       \minimum 0.0
       \maximum 1.0
  N3 , \field Design Boiler Water Outlet Temp
       \units C
  N4 , \field Max Design Boiler Water Mass Flow Rate
       \units kg/sec
  N5 , \field Minimum Part Load Ratio
  N6 , \field Maximum Part Load Ratio
  N7 , \field Opt Part Load Ratio
  N8 , \field Coefficient1 of the fuel use/part load ratio curve
  N9 , \field Coefficient2 of the fuel use/part load ratio curve
  N10, \field Coefficient3 of the fuel use/part load ratio curve
  A3 , \field Boiler_Water_Inlet_Node
  A4 , \field Boiler_Water_Outlet_Node
  N11; \field Temp Upper Limit Water Outlet
       \units C
```

Field: Boiler Name

This alpha field contains the identifying name for the Boiler.

Field: Fuel Type

This alpha field contains the keyword for the boiler fuel type. Currently, the only available fuel type is ELECTRIC. Future types will be GAS and FUEL OIL.

Field: Nominal capacity

This numeric field contains the nominal operating capacity (W) of the boiler.

Field: Theoretical Boiler Efficiency

This numeric field contains the heating efficiency (as a fraction between 0 and 1) of the boiler's burner.

Field: Design Boiler Water Outlet Temp

This numeric field contains the desired boiler water outlet temperature in Celsius.

Field: Max Design Boiler Water Mass Flow Rate

This numeric field contains the maximum design water mass flow rate in kg per second. This should be the largest flow rate than can be heated to the design outlet temperature.

Field: Minimum Part Load Ratio

This numeric field contains the minimum part load ratio. If the ratio of demand to boiler nominal capacity is less than the minimum part load ratio, then the Min PLR will determine the operating PLR. The expected range is between 0 and 1.

Field: Maximum Part Load Ratio

This numeric field contains the maximum part load ratio. If the ratio of demand to boiler nominal capacity is greater than the maximum part load ratio, then the Max PLR will determine the operating PLR. This value may exceed 1, but the normal range is between 0 and 1.1.

Field: Opt Part Load Ratio

This numeric field contains the optimum part load ratio. This is the part load ratio at which the boiler performs at its maximum efficiency.

Fuel Use Equation

The model is based the following three equations

$$OperatingPartLoadRatio = \frac{BoilerLoad}{BoilerNomCapacity}$$

$$TheoreticalFuelUse = \frac{BoilerLoad}{BoilerEfficiency}$$

$$FuelUsed = \frac{TheoreticalFuelUsed}{C1 + C2 * OperatingPartLoadRatio + C3 * OperatingPartLoadRatio^2}$$

The following three fields define the three coefficients for the fuel use equation.

Field: Coefficient1 of the fuel use/part load ratio curve

This numeric field contains the fuel use / PLR coefficient1.

Field: Coefficient2 of the fuel use/part load ratio curve

This numeric field contains the fuel use / PLR coefficient2.

Field: Coefficient3 of the fuel use/part load ratio curve

This numeric field contains the fuel use / PLR coefficient3.

Field: Boiler_Water_Inlet_Node

This alpha field contains the water inlet node name.

Field: Boiler_Water_Outlet_Node

This alpha field contains the water outlet node name.

Field: Temp Upper Limit Water Outlet

This numeric field contains the outlet temperature upper limit.

An example of this statement in an IDF is:

```
Boiler:Simple, Big Boiler,
 ELECTRIC,
 1000000,
 0.8,
 65,
 10,
 .15,
 1.0,
 0.65,
 1, 0, 0,
 Big Boiler Inlet Node, Big Boiler Outlet Node
 110;
```

Boiler Outputs

Outputs available from the boiler:

```
HVAC,Average,Boiler Load[W]
HVAC,Average,Fuel Used[W]
HVAC,Average,Boiler Inlet Temp[C]
HVAC,Average,Boiler Outlet Temp[C]
HVAC,Average,Boiler Mass Flow Rate[kg/s]
```

WaterHeater: Simple

The hot water heater is a constant efficiency heater that utilizes fuel oil, gas or electric energy.

Field: Water Heater Name

This alpha field contains the identifying name for the Water Heater

Field: Fuel Type

This alpha field contains the keyword for the type of fuel the water heater uses. Currently, the only type is ELECTRIC. Additional types will be FUEL OIL, and GAS.

Field: Nominal Capacity

This numeric field contains the nominal heating capability of the heater in Watts.

Field: Tank Volume

This numeric field contains the volume of stored “hot” water in liters. Note: the temperature of the tank water will change depending on the demand.

Field: Theoretical Water Heater Efficiency

This numeric field contains the heating efficiency (as a fraction between 0 and 1) of the water heater’s burner.

Field: Loss Coefficient (UA) Tank Losses to Ambient Air

This numeric field contains the heat transfer coefficient for the tank water losing energy to the ambient air.

Field: Cold Water Supply Temp

This numeric field contains the temperature of the water feeding the tank in Celsius.

Field: Peak Scheduled Demand Flow Rate

This numeric field contains the maximum demand for scheduled hot water in kg/s.

Field: Demand Schedule - Percentage of Peak Scheduled Demand

This alpha field contains the identifying name for the demand schedule. This schedule contains ratios for the percent of peak demand flow for each hour of the day.

Field: Water Heater Setpoint Temperature Schedule

This alpha field contains the identifying name for the setpoint temperature schedule. This schedule contains the setpoint temperature for the tank water. In effect, this controls when the water heater runs. By setting a low setpoint temperature, the water heater can be turned off for periods that it will not be used.

Field: Water Heater Ambient Temperature Schedule

This alpha field contains the identifying name for the ambient temperature schedule. This schedule contains the ambient temperature around the water heater. This temperature along with the loss coefficient helps determine the heat loss of the tank water.

Field: Water Use Side Heater_Water_Inlet_Node

This alpha field contains the identifying name for the Use Side Water Heater Inlet Node. The Use side is the loop that normally requires hot water.

Field: Water Use Side Heater_Water_Outlet_Node

This alpha field contains the identifying name for the Use Side Water Heater Outlet Node. The Use side is the loop that normally requires hot water.

Field: Water Use Side Effectiveness

This numeric field contains the heat transfer effectiveness between the tank water and the use side. If this is set to 1 then complete heat transfer occurs, simulating tank water mixing. If the effectiveness is lower, then the use side outlet water will not be as hot as the tank water, simulating a heat exchanger with the tank water.

Field: Water Source Side Heater_Water_Inlet_Node

This alpha field contains the identifying name for the Source Side Water Heater Inlet Node. The Source side is the loop that normally provides hot water. (A Heat Recovery Loop)

Field: Water Source Side Heater_Water_Outlet_Node

This alpha field contains the identifying name for the Source Side Water Heater Outlet Node. The Source side is the loop that normally provides hot water. (A Heat Recovery Loop)

Field: Water Source Side Effectiveness

This numeric field contains the heat transfer effectiveness between the tank water and the Source side. If this is set to 1 then complete heat transfer occurs, simulating tank water mixing. If the effectiveness is lower, then the Source side outlet water will be hotter than the tank water, simulating a heat exchanger with the tank water.

The IDD definition for the Water Heater is:

```
WATERHEATER:SIMPLE,
       \memo This is a simple water heater model.
  A1 , \field Water Heater Name
  A2 , \field Fuel Type
       \type choice
       \key FUEL OIL
       \key GAS
       \key ELECTRIC
  N1 , \field Nominal capacity
       \units W
  N2 , \field Tank Volume
         \units Liters
  N3 , \field Theoretical Water Heater Efficiency
       \type real
       \minimum 0.0
       \maximum 1.0
  N4 , \field Loss Coefficient (UA) Tank losses to Ambient Air
       \units J/K
  N5, \field Cold Water Supply Temp
      \units C
  N6, \field Peak Scheduled Demand Flowrate
      \units kg/s
  A3, \field Demand Schedule - Percentage of Peak Scheduled Demand
       \type object-list
       \object-list ScheduleNames
  A4, \field Water Heater Setpoint Temperature Schedule
       \type object-list
       \object-list ScheduleNames
  A5, \field Water Heater Ambient Temperature Schedule
       \type object-list
       \object-list ScheduleNames
  A6, \field Water Use Side Heater_Water_Inlet_Node
  A7, \field Water Use Side Heater_Water_Outlet_Node
  N7, \field Water Use Side Effectiveness
      \type real
      \minimum 0.0
      \maximum 1.0
  A8, \field Water Source Side Heater_Water_Inlet_Node
  A9, \field Water Source Side Heater_Water_Outlet_Node
  N8; \field Water Source Side Effectiveness
      \type real
      \minimum 0.0
      \maximum 1.0
```

An example of this statement in an IDF is:

```
WaterHeater:Simple, Big Water Heater,
    ELECTRIC, 200000, 150,  0.8,    1000,    20,    1,
    Hot Water Demand Schedule,
    Hot Water Setpoint Temperature Schedule,
    Hot Water Ambient Temperature Schedule,
    Big Water Heater Use Side Inlet Node,
    Big Water Heater Use Side Outlet Node,
    1,
    Big Water Heater Source Side Inlet Node,
    Big Water Heater Source Side Outlet Node,
    0.5;
```

Water Heater Outputs

Outputs available from the Water Heater:

```
HVAC,Average,WaterHeater Tank Temp[C]
HVAC,Average,WaterHeater Scheduled Flowrate[kg/s]
HVAC,Average,WaterHeater Heating Demand[W]
```

```
HVAC,Average,WaterHeater Energy In[W]
HVAC,Average,WaterHeater Tank Demand[W]
HVAC,Average,WaterHeater Loss Demand[W]
HVAC,Average,WaterHeater Scheduled Demand[W]
HVAC,Average,WaterHeater Use Demand[W]
HVAC,Average,WaterHeater Source Supply[W]
HVAC,Average,WaterHeater Use Side Inlet Temperature [C]
HVAC,Average,WaterHeater Use Side Outlet Temperature [C]
```

Purchased: Chilled Water

When the user is not interested in a plant simulation or there is some centralized source of chilled water, the following statement can be used in the input.

```
PURCHASED:CHILLED WATER,
  A1 , \field Purchased ID
  A2 , \field Plant_Loop_Inlet_Node
  A3 , \field Plant_Loop_Outlet_Node
  N1 ; \field Nominal Capacity
       \units W
```

Field: Purchased ID

This alpha field contains the identifying name for the purchased chilled water.

Field: Plant_Loop_Inlet_Node

This alpha field contains the identifying name for the purchased chilled water inlet node.

Field: Plant_Loop_Outlet_Node

This alpha field contains the identifying name for the purchased chilled water outlet node.

Field: Nominal Capacity

This numeric field contains the nominal demand (W) that the chilled water will meet.

An example of this statement in an IDF is:

```
PURCHASED:CHILLED WATER, Purchased Cooling,
        NODE_35,NODE_49,
        68000;
```

Purchased Chilled Water Outputs

```
HVAC,Sum,Purchased Chilled Water Energy[J]
HVAC,Average,Purchased Chilled Water Rate[W]
HVAC,Average,Purchased Cooling Rate[W]
HVAC,Average,Purchased Cooling Inlet Temp[C]
HVAC,Average,Purchased Cooling Outlet Temp[C]
HVAC,Average,Purchased Cooling Mass Flow Rate[kg/s]
```

Purchased: Hot Water

When the user is not interested in a plant simulation or there is some centralized source of hot water, the following statement can be used in the input.

```
PURCHASED:HOT WATER,
  A1 , \field Purchased ID
  A2 , \field Plant_Loop_Inlet_Node
  A3 , \field Plant_Loop_Outlet_Node
  N1 ; \field Nominal Capacity
       \units W
```

Field: Purchased ID

This alpha field contains the identifying name for the purchased hot water.

Field: Plant_Loop_Inlet_Node

This alpha field contains the identifying name for the purchased hot water inlet node.

Field: Plant_Loop_Outlet_Node

This alpha field contains the identifying name for the purchased hot water outlet node.

Field: Nominal Capacity

This numeric field contains the nominal demand (W) that the hot water will meet.

An example of this statement in an IDF is:

```
PURCHASED:HOT WATER,Purchased Heating,
        NODE_30,NODE_29,
        1000000;
```

Purchased Hot Water Outputs

```
HVAC,Sum,Purchased Hot Water Energy[J]
HVAC,Average,Purchased Hot Water Rate[W]
HVAC,Average,Purchased Heating Rate[W]
HVAC,Average,Purchased Heating Inlet Temp[C]
HVAC,Average,Purchased Heating Outlet Temp[C]
HVAC,Average,Purchased Heating Mass Flow Rate[kg/s]
```

Pump:Variable Speed

Pumps may be found in both plant and condenser loops. The syntax for a variable speed pump is given below.

```
PUMP:VARIABLE SPEED,
       \memo This pump model is described in the ASHRAE secondary HVAC toolkit.
  A1 , \field Pump Name
  A2 , \field Inlet_Node
  A3 , \field Outlet_Node
  N1 , \field Rated Volumetric Flow Rate
       \units m3/s
  N2 , \field Rated Pump Head
       \units Pa
  N3 , \field Rated Power Consumption
       \units W
  N4 , \field Motor Efficiency
       \type real
       \minimum 0.0
       \maximum 1.0
  N5 , \field Fraction Of Motor Inefficiencies To Fluid Stream
  N6 , \field Coefficient1 of the Part Load Performance Curve
  N7 , \field Coefficient2 of the Part Load Performance Curve
  N8 , \field Coefficient3 of the Part Load Performance Curve
  N9 ; \field Coefficient4 of the Part Load Performance Curve
```

Field: Pump Name

This alpha field contains the identifying name for the pump.

Field: Inlet_Node

This alpha field contains the identifying name for the pump inlet node.

Field: Outlet_Node

This alpha field contains the identifying name for the pump outlet node.

Field: Rated Volumetric Flow Rate

This numeric field contains the pump's rated volumetric flow rate in cubic meters per second.

Field: Rated Pump Head

This numeric field contains the pump's rated head in Pascals.

Field: Rated Power Consumption

This numeric field contains the pump's rated power consumption in Watts.

Field: Motor Efficiency

This numeric field contains the pump's efficiency in decimal form (0 = 0%, 1 = 100%).

Field: Fraction of Motor Inefficiencies to Fluid Stream

This numeric field contains the pump's fraction of power loss to the fluid.

Field: Coefficient1 of the Part Load Performance Curve

This numeric field contains the first coefficient in the part load ratio curve. The fraction of full load power is determined by the cubic equation:

$$FractionFullLoadPower = C_1 + C_2 PLR + C_3 PLR^2 + C_4 PLR^4$$

where C_1,C_2,C_3,and C_4 are Coefficients 1 – 4 (below) and PLR is the Part Load Ratio.

Field: Coefficient2 of the Part Load Performance Curve

This numeric field contains the second coefficient in the part load ratio curve.

Field: Coefficient3 of the Part Load Performance Curve

This numeric field contains the third coefficient in the part load ratio curve.

Field: Coefficient4 of the Part Load Performance Curve

This numeric field contains the fourth coefficient in the part load ratio curve.

An example of this statement in an IDF is:

```
PUMP:VARIABLE SPEED, Circ Pump,
        NODE_51, NODE_34,
        .0011,
        250,
        7000,
        .87,
        0.0,
        1,0,0,0;
```

Pump Outputs

```
HVAC,Sum,Variable Speed Pump Energy[J]
HVAC,Average,Variable Speed Pump Power[W]
HVAC,Average,Variable Speed Pump Shaft Power[W]
HVAC,Average,Variable Speed Pump Heat To Fluid[W]
HVAC,Average,Variable Speed Pump Outlet Temp[C]
HVAC,Average,Variable Speed Pump Mass Flow Rate[kg/s]
```

Cooling Tower:Single Speed

Cooling towers are components that may be assigned to condenser loops. The single-speed cooling tower is modeled as a counterflow heat exchanger based on Merkel's theory. The user must input the design characteristics for the tower: water flow rate, air flow rate, fan power, and heat transfer coefficient-area product (UA). The model will also account for tower performance in the "free convection" regime, when the tower fan is off but the water pump remains on and heat transfer still occurs (albeit at a low level). If the user wants the model to account for "free convection", the corresponding air flow rate and heat transfer coefficient-area product (UA) must be specified.

The cooling tower seeks to maintain the temperature of the water exiting the cooling tower at (or below) a set point. The set point schedule is defined by the field "Loop Temperature Setpoint Schedule Name" for the CONDENSER LOOP object. The model first checks to determine the impact of "free convection", if specified by the user, on the tower exiting water temperature. If the exiting water temperature based on "free convection" is at or below the set point, then the tower fan is not turned on. If the exiting water temperature remains above the set point after "free convection" is modeled, then the tower fan is turned on to reduce the exiting water temperature to the set point. The model assumes that part-load operation is represented by a simple linear interpolation between two steady-state regimes (i.e., tower fan on for the entire simulation time step and tower fan off for the entire simulation time step). Cyclic losses are not taken into account.

The IDD specification for the single-speed cooling tower is given below.

```
COOLING TOWER:SINGLE SPEED,
  A1 , \field Tower ID
       \type alpha
  A2 , \field Inlet_Node
  A3 , \field Outlet_Node
  N1 , \field Design Water Flow Rate
       \type real
       \units m3/s
       \minimum 0.0
  N2 , \field Design Air Flow Rate
       \type real
       \units m3/s
       \minimum 0.0
  N3 , \field Fan Power at Design Air Flow Rate
       \type real
       \units W
       \minimum 0.0
  N4 , \field Tower UA value at Design Air Flow Rate
       \type real
       \units W/C
       \minimum 0.0
       \maximum 300000.0
  N5 , \field Air Flow Rate in Free Convection Regime
       \type real
       \units m3/s
       \minimum 0.0
  N6 ; \field Tower UA value at Free Convection Air Flow Rate
       \type real
       \units W/C
       \minimum 0.0
       \maximum 300000.0
```

Field: Tower ID

This alpha field contains the identifying name for the cooling tower.

Field: Inlet_Node

This alpha field contains the identifying name for the cooling tower's inlet node.

Field: Outlet_Node

This alpha field contains the identifying name for the cooling tower's outlet node.

Field: Design Water Flow Rate

This numeric field contains the design water flow rate in m^3/s.

Field: Design Air Flow Rate

This numeric field contains the design air flow rate in m^3/s.

Field: Fan Power at Design Air Flow Rate

This numeric field contains the fan power (in Watts) at the design air flow rate specified in the previous field.

Field: Tower UA Value at Design Air Flow Rate

This numeric field contains the heat transfer coefficient-area product (UA) in watts per degree Celsius corresponding to the tower flow rates specified above.

Field: Air Flow Rate in Free Convection Regime

This numeric field contains the air flow rate (m^3/s) when the tower is in the "free convection" regime (water flow exists but tower fan is turned off). This value must be less than the value specified for

the field “Design Air Flow Rate”. The user should set this field to 0.0 if they do not wish to model “free convection”.

Field: Tower UA Value at Free Convection Air Flow Rate

This numeric field contains the heat transfer coefficient-area product (W/°C) when the tower is in the “free convection” regime (water flow exists but tower fan is turned off). This value must be less than the value specified for the field “Tower UA Value at Design Air Flow Rate”. The user should set this field to 0.0 if they do not wish to model “free convection”.

An example of this statement in an IDF is:

```
COOLING TOWER:SINGLE SPEED,
  My Tower,                   ! Name
  Condenser Tower Inlet Node, ! Inlet node name
  Condenser Tower Outlet Node,! Outlet node name
  .0011,                      ! Water flow rate, m3/s
  16.0,                       ! Design air flow rate, m3/s
  10000.,                     ! Fan power at design air flow, W
  3500.,                      ! Tower UA at design flow rates, W/C
  0.0,                        ! Air flow rate for free convection, m3/s
  0.0;                        ! Tower UA at free convection air flow, W/C
```

Cooling Tower:Single Speed Outputs

```
HVAC,Average,Single-Speed Tower Water Inlet Temp [C]
HVAC,Average,Single-Speed Tower Water Outlet Temp [C]
HVAC,Average,Single-Speed Tower Water Mass Flow Rate [kg/s]
HVAC,Average,Single-Speed Tower Heat Transfer [W]
HVAC,Average,Single-Speed Tower Fan Electric Power [W]
HVAC,Sum,Single-Speed Tower Fan Electric Consumption [J]
```

Cooling Tower:Two Speed

The two-speed cooling tower is modeled in a similar fashion to the single-speed tower, as a counterflow heat exchanger based on Merkel’s theory. The user must input the design characteristics for the tower: the air flow rate, fan power and heat transfer coefficient-area product (UA) at both the high fan speed and the low fan speed, and the design water flow rate. The model will also account for tower performance in the “free convection” regime, when the tower fan is off but the water pump remains on and heat transfer still occurs (albeit at a low level). If the user wants the model to account for “free convection”, the corresponding air flow rate and heat transfer coefficient-area product (UA) must be specified.

The cooling tower seeks to maintain the temperature of the water exiting the cooling tower at (or below) a set point. The set point schedule is defined by the field “Loop Temperature Setpoint Schedule Name” for the CONDENSER LOOP object. The model first checks to determine the impact of “free convection”, if specified by the user, on the tower exiting water temperature. If the exiting water temperature based on “free convection” is at or below the set point, then the tower fan is not turned on. If the exiting water temperature remains above the set point after “free convection” is modeled, then the tower fan is turned on at low speed to reduce the exiting water temperature. If operating the tower fan at low speed does not reduce the exiting water temperature to the set point, then the tower fan is increased to its high speed.

The model assumes that part-load operation is represented by a simple linear interpolation between two steady-state regimes (i.e., tower fan at high speed for the entire simulation time step and tower fan at low speed for the entire simulation time step, or tower fan at low speed for the entire simulation time step and tower fan off for the entire simulation time step). Cyclic losses are not taken into account.

The IDD specification for the two-speed cooling tower is given below.

```
COOLING TOWER:TWO SPEED,
  A1 , \field Tower ID
       \type alpha
  A2 , \field Inlet_Node
  A3 , \field Outlet_Node
  N1 , \field Design Water Flow Rate
       \type real
       \units m3/s
       \minimum 0.0
  N2 , \field Air Flow Rate at High Fan Speed
       \type real
       \units m3/s
       \minimum 0.0
  N3 , \field Fan Power at High Fan Speed
       \type real
       \units W
       \minimum 0.0
  N4 , \field Tower UA Value at High Fan Speed
       \type real
       \units W/C
       \minimum 0.0
       \maximum 300000.0
  N5 , \field Air Flow Rate at Low Fan Speed
       \type real
       \units m3/s
       \minimum 0.0
```

```
  N6 , \field Fan Power at Low Fan Speed
       \type real
       \units W
       \minimum 0.0
  N7 , \field Tower UA Value at Low Fan Speed
       \type real
       \units W/C
       \minimum 0.0
       \maximum 300000.0
  N8 , \field Air Flow Rate in Free Convection Regime
       \type real
       \units m3/s
       \minimum 0.0
  N9 ; \field Tower UA Value at Free Convection Air Flow Rate
       \type real
       \units W/C
       \minimum 0.0
       \maximum 300000.0
```

Field: Tower ID

This alpha field contains the identifying name for the cooling tower.

Field: Inlet_Node

This alpha field contains the identifying name for the cooling tower's inlet node.

Field: Outlet_Node

This alpha field contains the identifying name for the cooling tower's outlet node.

Field: Design Water Flow Rate

This numeric field contains the design water flow rate in m^3/s.

Field: Air Flow Rate at High Fan Speed

This numeric field contains the tower air flow rate at high fan speed in m^3/s.

Field: Fan Power at High Fan Speed

This numeric field contains the fan power (in Watts) at the high-speed air flow rate specified in the previous field.

Field: Tower UA Value at High Fan Speed

This numeric field contains the heat transfer coefficient-area product (UA) in watts per degree Celsius corresponding to the tower water flow rate and high-speed air flow rate specified above.

Field: Air Flow Rate at Low Fan Speed

This numeric field contains the tower air flow rate at low fan speed in m^3/s. This value must be less than the value specified for the field "Air Flow Rate at High Fan Speed".

Field: Fan Power at Low Fan Speed

This numeric field contains the fan power (in Watts) at the low-speed air flow rate specified in the previous field.

Field: Tower UA Value at Low Fan Speed

This numeric field contains the heat transfer coefficient-area product (UA) in watts per degree Celsius corresponding to the tower water flow rate and low-speed air flow rate specified above. This value must be less than the value specified for the field "Tower UA Value at High Fan Speed".

Field: Air Flow Rate in Free Convection Regime

This numeric field contains the air flow rate (m^3/s) when the tower is in the "free convection" regime (water flow exists but tower fan is turned off). This value must be less than the value specified for the field "Air Flow Rate at Low Fan Speed". The user should set this field to 0.0 if they do not wish to model "free convection".

Field: Tower UA Value at Free Convection Air Flow Rate

This numeric field contains the heat transfer coefficient-area product (W/°C) when the tower is in the "free convection" regime (water flow exists but tower fan is turned off). This value must be less than the value specified for the field "Tower UA Value at Low Fan Speed". The user should set this field to 0.0 if they do not wish to model "free convection".

An example of this statement in an IDF is:

```
COOLING TOWER:TWO SPEED,
        My Tower,                   ! Name
        Condenser Tower Inlet Node, ! Inlet node name
        Condenser Tower Outlet Node,! Outlet node name
        .0011,                      ! Design water flow rate, m3/s
        16.0,                       ! Air flow rate at high fan speed, m3/s
        10000,                      ! Fan power at high fan speed, W
        3500.,                      ! Tower UA at high fan speed, W/C
        8.0,                        ! Air flow rate at high fan speed, m3/s
        4000,                       ! Fan power at high fan speed, W
        1750.,                      ! Tower UA at high fan speed, W/C
        0.0,                        ! Air flow rate for free convection, m3/s
        0.0;                        ! Tower UA at free convection air flow, W/C
```

Cooling Tower:Two Speed Outputs

```
HVAC,Average,Two-Speed Tower Water Inlet Temp [C]
HVAC,Average,Two-Speed Tower Water Outlet Temp [C]
HVAC,Average,Two-Speed Tower Water Mass Flow Rate [kg/s]
HVAC,Average,Two-Speed Tower Heat Transfer [W]
HVAC,Average,Two-Speed Tower Fan Electric Power [W]
```

```
HVAC,Sum,Two-Speed Tower Fan Electric Consumption [J]
```

Group – Plant-Condenser Flow Control

The connector list described above determines how the branches of a particular loop will be hooked together. These connections can be classified either as a separation of a single stream into several outlet streams (splitter) or the merging of several streams into a single outlet stream (mixer). Due to the limitation per branch of a single splitter and a single mixer, the connector list can only have two pieces of equipment as a maximum. The names defined for either/both the splitter or/and the mixer refer then to "component" definitions as described below.

Splitter,Mixer

```
SPLITTER,
 ! [Split One Air/Water Stream Into N outlet streams]
   A1, \field SplitterName
   A2, \field Inlet Branch Name
       \reference Branches
   A3, \field Outlet Branch Name 1
       \reference Branches
   A4, \field Outlet Branch Name 2
       \reference Branches
   A5, \field Outlet Branch Name 3
       \reference Branches
   A6, \field Outlet Branch Name 4
       \reference Branches
-- reduced for brevity, up to 50 outlet branches allowed
MIXER,
 ! [Mix N inlet Air/Water Streams Into one]
   A1, \field MixerName
   A2, \field Outlet Branch Name
       \reference Branches
   A3, \field Inlet Branch Name 1
       \reference Branches
   A4, \field Inlet Branch Name 2
       \reference Branches
   A5, \field Inlet Branch Name 3
       \reference Branches
   A6, \field Inlet Branch Name 4
       \reference Branches
-- reduced for brevity, up to 50 inlet branches allowed
```

The format of both the SPLITTER and MIXER statements is the same. Both begin with an identifying name followed by the branch name of the "single side" of the component. In the case of the splitter, this is the inlet since the inlet stream is broken into several outlet streams. In the case of the mixer, this is the outlet since several streams are mixed together to form a single outlet. The remaining list of up to 50 names is simply the branch names of the outlet legs in the case of the splitter and inlet legs in the case of the mixer. No control logic is assume in these components—a determination of how much air to split in which direction using the splitter must be defined by other components.

Splitter

Field: SplitterName

This alpha field contains the identifying name for the Splitter.

Field: Inlet Branch Name

This alpha field contains the identifying name for the Splitter Inlet Branch.

Field: Outlet Branch Name 1

This alpha field contains the identifying names for the Splitter Outlet Branches.

Mixer

Field: MixerName

This alpha field contains the identifying name for the Mixer.

Field: Outlet Branch Name

This alpha field contains the identifying name for the Mixer Outlet Branch.

Field: Inlet Branch Name 1

This alpha field contains the identifying names for the Mixer Inlet Branches.

An example of these statements in an IDF is:

```
SPLITTER,
         CW Loop Splitter,
         CW Pump Branch,
         Little Chiller Branch,
         Big Chiller Branch,
         Purchased Cooling Branch,
         Supply Bypass Branch;
MIXER,
         CW Loop Mixer,
         Cooling Supply Outlet,
         Little Chiller Branch,
         Big Chiller Branch,
         Purchased Cooling Branch,
         Supply Bypass Branch;
```

Group – Air Distribution

Air Primary Loop

Air loops along with zone equipment form the entire forced air heating and cooling system (air side). The main statement for defining an air loop is the *Air Primary Loop* object described here. As with the main plant and condenser statements, several of the items in the Air Primary Loop object definition are actually names that refer to other objects in the input file. After the Air Primary Loop object title and identifying name, four such list pointers are encountered: for controllers, system availability, branches, and connectors. The Controller List defines how the air loop will respond due to various inputs (control signals). The System Availability Manager list refers to methods for controlling when a system is operational. This may be as simple as a schedule to define when the system is shutdown. The Branch List lists the branches that comprise the primary air system. Finally, the Connector List lists the connections between the branches. The branches and connections together define the primary air system topology.

The only numeric input is the design primary airflow rate. This item is input just before the Branch List name.

The next series of names refer to nodes for the various inlet and outlet points of the air loop. The air loop starts where the zone equipment ends. This is a single point consisting of the return air duct once all of the zone return air streams have been collected. While in reality, there is really only one point, for clarity within the simulation components and consistency with the other HVAC loop sections, this point in the systems is defined as two points: one that resides with the zone equipment simulation and one that is acted upon by the air loop simulation. Both node names must be entered into the input file, and both nodes must have unique names. Similarly, the end

points of the air loop that also correspond to the beginning points of the zone equipment loop must also be defined. These consist of names referencing lists of up to three pairs of node names as shown below. Up to three air loop outlets are allowed to accommodate the simulation of three deck systems.

Field: Primary Air Loop Name

This field is a unique, user assigned name for a single instance of an Air Primary Loop object. Any other object referencing this Air Primary Loop will use this name.

Field: Name: Controller List

This field is the name of a Controller List object. A Controller List is simply a list of controllers giving both controller name and type. This Controller List specifies all the controllers that will act on this primary air loop. The order of the controllers in the list is significant: controllers are simulated sequentially in the order given in the Controller List.

Field: Name: System Availability Manager List

This field is the name of a System Availability Manager List object. A System Availability Manager List is a list of System Availability Managers giving both System Availability Manager type and name.

Field: Primary air design volumetric flow rate

This is the system primary air design volumetric flow rate in cubic meters per second.

Field: Air Loop Branch List Name

This field is the object name of a Branch List object (see Branch List and Branch). The Branch List named here specifies all the branches composing the primary air system. These branches, together with the Connectors listed in the Connector List, define the primary air system topology.

Field: Air Loop Connector List Name

This field is the name of Connector List object. This Connector List object lists all the Connectors (by type and name) that are included in this primary air system. These Connectors, together with the Branches in the Branch List, define the topology of the primary air system.

Field: ReturnAir AirLoop Inlet Node

The name of the air entrance node of this primary air system. This is the inlet node for return air for this air system.

Field: ZoneEquipGroup Outlet Node

The name of the air outlet node for the zone equipment group (Controlled Zone Equip Configuration) attached to the primary air system. This should be the outlet node of a Zone Mixer in the Zone Return Air Path for the zone equipment group attached to this primary air system.

Field: SupplyAirPath ZoneEquipGroup Inlet Nodes

The name of a Node List (see Node List) listing up to three nodes which are the air inlet nodes for the zone equipment group (Controlled Zone Equip Configuration) attached to this primary air system. These nodes should be the inlet nodes to the Zone Splitters in the Zone Supply Air Path for the zone equipment group attached to this primary air system.

Field: AirLoop Outlet Nodes

The name of a Node List (see Node List) listing the nodes that are the air outlet nodes of this primary air system. The list can contain the names of up to three nodes.

The IDD specification:

```
AIR PRIMARY LOOP,
  A1 , \field Primary Air Loop Name
  A2 , \field Name:  Controller List
  A3 , \field Name:  System Availability Manager List
  N1 , \field Primary air design volumetric flow rate
       \units m3/sec
   A4, \field Air Loop Branch List Name
       \reference BranchLists
   A5, \field Air Loop Connector List Name
       \reference ConnectorLists
   A6, \field ReturnAir AirLoop Inlet Node
   A7, \field ZoneEquipGroup Outlet Node
   A8, \field SupplyAirPath ZoneEquipGroup Inlet Nodes
   A9; \field AirLoop Outlet Nodes
```

An example of this statement in an IDF is:

```
AIR PRIMARY LOOP,
  Main Dual Duct Air Loop,           ! Primary Air Loop Name
  Dual Duct System 1 Controllers,    ! Controller List
  Dual Duct System 1 Schedule List , ! System Availability Manager List
  1.3 ,                              ! Primary air design volumetric flow rate
  Dual Duct Air Loop Branches ,      ! Air Loop Branch List Name
  Dual Duct Connectors ,             ! Air Loop Connector List Name
  Supply Fan Inlet Node ,            ! ReturnAir AirLoop Inlet Node
  Return Air Mixer Outlet ,          ! ZoneEquipGroup Outlet Node
  Zone Equipment Inlet Node List ,   ! SupplyAirPath ZoneEquipGroup Inlet Nodes
  Air Loop Outlet Node List ;        ! AirLoop Outlet Nodes
```

A map for Air Loop input syntax is shown in the following diagram.

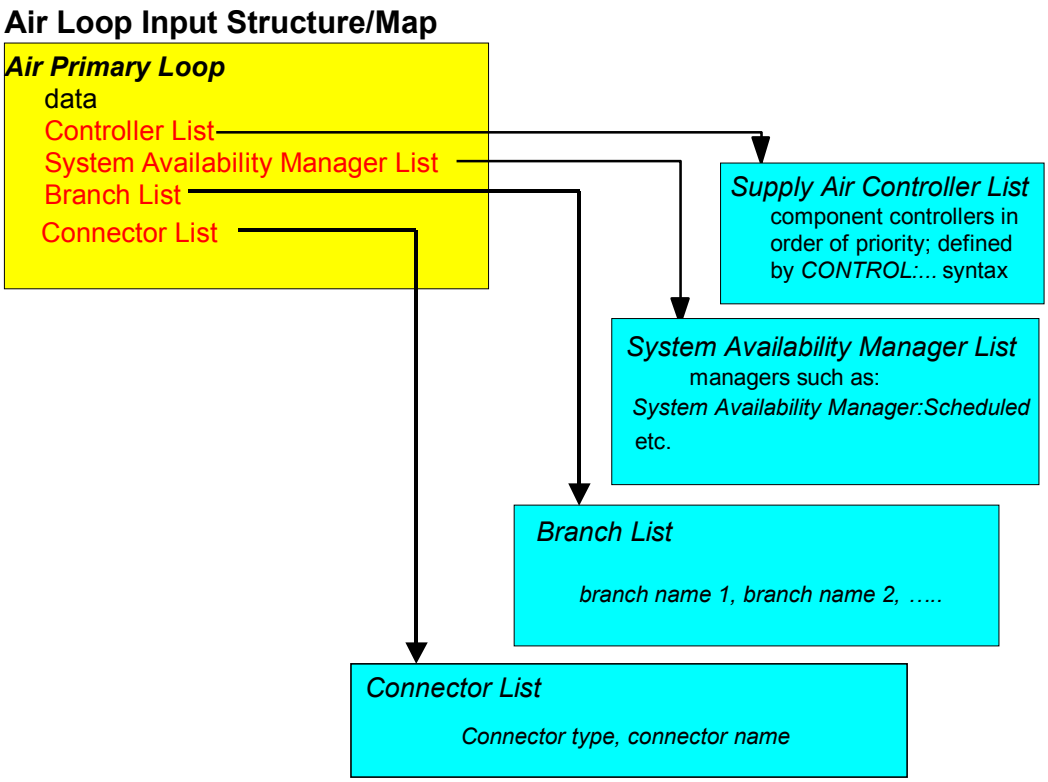

Figure 20. Air Loop Input Syntax Map

Controller List

The syntax for the controller list definition is shown below. As with other lists in EnergyPlus input, the object title and identifying name are followed by type-name pairs. In this case, the types are controller types. The order in which controllers appear on this list also define the priority as described below. The identifying name refers back to the name recorded in the AIR PRIMARY LOOP statement.

Field: Name

The user designated unique name of an instance of a Controller List. Any object referencing this Controller List will do so using this name.

Field Set (Key, Controller Name) up to 8

After the identifying name, input for the Controller List consists of up to 8 pairs of data items: a controller type and a controller name. The first controller listed has the highest priority, the second the second highest priority, and so forth.

Field: KEY--Controller 1

The type of controller. This should be a key word defining a class of controllers such as CONTROLLER:SIMPLE.

Field: Controller Name 1

The name of a controller object (such as a CONTROLLER:SIMPLE) defined elsewhere in the input file.

The IDD specification:

```
CONTROLLER LIST,
  A1 , \field Name
   !List controllers in order of priority (highest to lowest)
  A2 , \field KEY--Controller  1
  A3 , \field Controller Name 1
  A4 , \field KEY--Controller  2
  A5 , \field Controller Name 2
-- etc to # of controller sets entered
```

An example of this statement in an IDF is:

```
CONTROLLER LIST,
           Dual Duct System 1 Controllers,
           Controller:Simple, Main Cooling Coil Controller,
           Controller:Simple, Main Heating Coil Controller;
```

System Availability Manager List

The syntax for the availability manager list is shown below. The identifying name must be referred to in the AIR PRIMARY LOOP statement shown above. Following the name, a list of management types and identifying name pairs are shown. These point to actual availability managers and are listed in order of priority (highest to lowest).

Field: Name

The user designated unique name of an instance of a System Availability Manager List. Any object referencing this System Availability Manager List will do so using this name.

Field Set (Key, Name) up to 3

After the identifying name, input for the System Availability Manager List consists of up to 3 pairs of data items: a System Availability Manager type and a System Availability Manager name. The first System Availability Manager listed has the highest priority, the second the second highest priority, and so forth.

Field: KEY--System Availability Manager

The type of System Availability Manager. This should be a key word defining a class of System Availability Managers such as :

SYSTEM AVAILABILITY MANAGER:SCHEDULED.

Field: System Availability Manager name

The name of a System Availability Manager object (such as a SYSTEM AVAILABILITY MANAGER:SCHEDULED) defined elsewhere in the input file.

The IDD specification:

```
SYSTEM AVAILABILITY MANAGER LIST,
  A1 , \field Name
 !List System Availability Managers in order of priority (lowest to highest)
  A2 , \field KEY--System Availability Manager 1
  A3 , \field System Availability Manager name 1
  A4 , \field KEY--System Availability Manager 2
  A5 , \field System Availability Manager name 2
  A6 , \field KEY--System Availability Manager 3
  A7 ; \field System Availability Manager name 3
```

An example of this statement in an IDF is:

```
SYSTEM AVAILABILITY MANAGER LIST, Dual Duct System 1 Schedule List ,
           SYSTEM AVAILABILITY MANAGER:SCHEDULED, Dual Duct System 1 Schedule ;
```

System Availability Manager:Scheduled

The system availability is determined through input. While there are several ways in which the system availability might be controlled, the only available method for controlling system availability currently implemented in EnergyPlus is a schedule. The syntax for implementing such is shown below. The identifying name refers back to the name recorded in the SYSTEM AVAILABILITY MANAGER LIST statement shown above. The schedule must be the name of a schedule defined elsewhere in the input.

Field: Name

The unique, user assigned name of an instance of a scheduled system availability manager. Other objects that use this scheduled system availability manager will reference it by this name.

Field: Schedule name

The name of a schedule defined elsewhere in the input. Schedule values greater than zero (usually 1 is used) indicate that the system is on. Schedule values less than or equal to zero (usually 0 is used) denote that the system is off.

The IDD specification:

```
SYSTEM AVAILABILITY MANAGER:SCHEDULED,
  A1 , \field Name
  A2 ; \field Schedule name
       \type object-list
       \object-list ScheduleNames
```

An example of this statement in an IDF is:

```
SYSTEM AVAILABILITY MANAGER:SCHEDULED,
           Dual Duct System 1 Schedule,
           FanAndCoilAvailSched;
```

The syntax for the branch list, branches, connector list and node list is defined elsewhere. An example of their use in defining a primary air system is:

```
BRANCH LIST,
    Dual Duct Air Loop Branches , ! Branch List Name
    Air Loop Main Branch ,        ! Branch Name 1
    Heating Coil Air Sys Branch ,         ! Branch Name 2
    Cooling Coil Air Sys Branch ;         ! Branch Name 3

CONNECTOR LIST,
    Dual Duct Connectors , ! Connector List Name
    SPLITTER ,             ! Type of Connector 1
    DualDuctAirSplitter ;  ! Name of Connector 1

NODE LIST,
    Zone Equipment Inlet Node List ,
    Main Hot Air Inlet ,
    Main Cold Air Inlet ;

NODE LIST,
    Air Loop Outlet Node List ,
    Heating Coil Outlet Node ,
    Cooling Coil Outlet Node ;
```

```
BRANCH,
    Air Loop Main Branch ,  ! Branch Name
    1.3 ,                   ! Maximum Branch Flow Rate
 FAN:SIMPLE:VariableVolume, Var Vol Supply Fan 1, Supply Fan Inlet Node, Supply Fan Outlet Node, PASSIVE ;

BRANCH,
    Heating Coil Air Sys Branch ,  ! Branch Name
    1.3 ,                  ! Maximum Branch Flow Rate
 COIL:Water:SimpleHeating, Main Heating Coil, Heating Coil Inlet Node, Heating Coil Outlet Node, ACTIVE ;

BRANCH,
    Cooling Coil Air Sys Branch ,  ! Branch Name
    1.3 ,                  ! Maximum Branch Flow Rate
COIL:Water:DetailedFlatCooling, Detailed Cooling Coil, Cooling Coil Inlet Node, Cooling Coil Outlet Node,
ACTIVE ;

SPLITTER,
    DualDuctAirSplitter,
    Air Loop Main Branch,
    Heating Coil Air Sys Branch,
    Cooling Coil Air Sys Branch;
```

Outside Air System

The Outside Air System is a subsystem of an Air Primary Loop. It handles the mixed air portion of the primary air system: the system relief air, the outside air inlet, and any components and controllers associated with the system relief air and outside air streams. From the perspective of the Air Primary Loop the Outside Air System is treated as a single component. As a subsystem, it can contain one or more components and controllers.

The input for the Outside Air System consists of a system name, a controller list name, an equipment list name, and an availability manager list name. The controller list simply lists, by type and unique name, all the controllers in the subsystem. The controllers will be simulated in list order. The equipment list lists all the components in the subsystem, by type and name. The equipment is simulated in list order. Finally, the availability manager list gives the type and name of the availability managers used by the subsystem.

Field: Name

The unique, user assigned name for a single instance of an Outside Air System. Any other object referencing this Outside Air System will use this name.

Field: Name: Controller List

This field is the name of a Controller List object. A Controller List is simply a list of controllers giving both controller name and type. This Controller List specifies all the controllers that will act on this outside air system. The order of the controllers in the list is significant: controllers are simulated sequentially in the order given in the Controller List. Typically the Controller List would contain a Controller:Outside Air.

Field: Air Loop Equipment List Name

This field is the name of an Air Loop Equipment List object. An Air Loop Equipment List is simply a list of components giving both component name and type. This Air Loop Equipment List specifies all the components that will be simulated in this outside air system. The order of the components in the list is significant: components are simulated sequentially in the order given in the Air Loop Equipment List. Typically the equipment list would contain at least an Outside Air Mixer.

Field: System Availability Manager List

This field is the name of a System Availability Manager List object. A System Availability Manager List is a list of System Availability Managers giving both System Availability Manager type and name.

The full IDD specification follows:

```
OUTSIDE AIR SYSTEM,
   A1, \field Name
   A2, \field Name: Controller List
   A3, \field Air Loop Equipment List Name
   A4; \field System Availability Manager List
```

An IDF example, including the Air Primary Loop, and the controller and equipment lists.

```
Air Primary Loop,Typical Terminal Reheat 1,
           Reheat System 1 Controllers,
           Reheat System 1 Avail List,
           1.3,
           Air Loop Branches,,
           Air Loop Inlet Node, Return Air Mixer Outlet,
           Zone Equipment Inlet Node, Air Loop Outlet Node;

    CONTROLLER LIST,
           Reheat System 1 Controllers,
           Controller:Simple, Main Cooling Coil Controller;

     BRANCH LIST, Air Loop Branches,
           Air Loop Main Branch;

     BRANCH, Air Loop Main Branch,
           1.3,
           OUTSIDE AIR SYSTEM, OA Sys 1,
           Air Loop Inlet Node, Mixed Air Node,PASSIVE
           FAN:SIMPLE:ConstVolume, Supply Fan 1,
           Mixed Air Node, Cooling Coil Air Inlet Node, ACTIVE,
           COIL:Water:DetailedFlatCooling, Detailed Cooling Coil,
           Cooling Coil Air Inlet Node, Air Loop Outlet Node, PASSIVE;

    SYSTEM AVAILABILITY MANAGER LIST, Reheat System 1 Avail List,
           SYSTEM AVAILABILITY MANAGER:SCHEDULED, Reheat System 1 Avail;

    SYSTEM AVAILABILITY MANAGER:SCHEDULED, Reheat System 1 Avail,
           FanAndCoilAvailSched;
```

```
OUTSIDE AIR SYSTEM,
       OA Sys 1,
       OA Sys 1 Controllers,
       OA Sys 1 Equipment,
       Reheat System 1 Avail List;

    CONTROLLER LIST,
           OA Sys 1 Controllers,
           CONTROLLER:OUTSIDE AIR, OA Controller 1;

    AIR LOOP EQUIPMENT LIST,
           OA Sys 1 Equipment,
           HEAT EXCHANGER:AIR TO AIR:FLAT PLATE,OA Heat Recovery 1,
           OUTSIDE AIR MIXER, OA Mixing Box 1;
```

Air Loop Equipment List

Used to specify the components in the outside air system. The components will be simulated in the order in which they occur in the list.

Field: Name

The user designated unique name of an instance of an Air Loop Equipment List. Any object referencing this Air Loop Equipment List will do so using this name.

Field Set (Key, Component Name) up to 8

After the identifying name, the Air Loop Equipment List consists of up to 8 pairs of data items:

Field: KEY – System Component

This field specifies the keyword for the type of component used.

Field: Component Name

This field is the unique name of the component specified in the previous field.

The IDD specification:

```
AIR LOOP EQUIPMENT LIST,
       \memo List equipment in simulation order
  A1 , \field Name
  A2 , \field KEY--System Component 1
  A3 , \field Component Name 1
  A4 , \field KEY--System Component 2
  A5 , \field Component Name 2
-- etc to # of sets entered
```

An example from an IDF:

```
AIR LOOP EQUIPMENT LIST,
           OA Sys 1 Equipment,
           HEAT EXCHANGER:AIR TO AIR:FLAT PLATE,OA Heat Recovery 1,
           OUTSIDE AIR MIXER, OA Mixing Box 1;
```

Outside Air Inlet Node List

The program needs to know which HVAC system nodes are inlets for outside air. Knowing this, the program can set the conditions at these nodes to the outdoor conditions at the start of each major time step. The Outside Air Inlet Node List provides the means for specifying which nodes are outside air nodes.

The input is flexible: there may be one or more Outside Air Inlet Node List in each input file. Each list contains up to 25 names. The names can be the name of a unique HVAC system node, or the name of a Node List which will contain the actual node names. Duplicate node names are ignored.

Field: Node name or Node List name

The name of an HVAC system node or of a Node List object. There can be up to 25 names.

The IDD specification:

```
OUTSIDE AIR INLET NODE LIST,
  A1, \field 1st Node name or node list name
      \type alpha
  A2, \field 2nd Node name or node list name
      \type alpha
  A3, \field 3rd Node name or node list name
      \type alpha
-- etc to # of node or node lists entered
```

An example IDF:

```
OUTSIDE AIR INLET NODE LIST,
```

```
    OutsideAirInletNodes;
    NODE LIST,OutsideAirInletNodes,
       Outside Air Inlet Node;
```

Outside Air Mixer

The Outside Air Mixer is the most common component used in an outside air system. The outside air mixer has 2 inlet air streams: the system return air and the outside air. It has 2 outlet air streams: the system relief air and the mixed air. This is a passive component. It takes the inlet mass flows and conditions plus the relief air mass flow and calculates the mixed air flow rate and conditions (as well as the relief air conditions). The inlet and relief mass flow must be set outside the component – most commonly by an outside air controller. The Outside Air Mixer can also be used in compound components such as a fan coil unit.

Input for this object is very simple: a unique name plus the node names of the 2 in let nodes and the 2 outlet nodes.

Field: Name

A unique user assigned name for a particular outside air mixer component. Any reference to this component by another object will use this name.

Field: Mixed_Air_Node

The name of the HVAC system node which is the outlet for the mixed air stream.

Field: Outside_Air_Stream_Node

The name of the HVAC system node which is the inlet for the outside air stream.

Field: Relief_Air_Stream_Node

The name of the HVAC system node which is the outlet for the system relief air.

Field: Return_Air_Stream_Node

The name of the HVAC system node which is the inlet for the return air stream.

The IDD specification:

```
OUTSIDE AIR MIXER,
  A1, \field Name
  A2, \field Mixed_Air_Node
  A3, \field Outside_Air_Stream_Node
  A4, \field Relief_Air_Stream_Node
  A5; \field Return_Air_Stream_Node
```

An IDF example:

```
OUTSIDE AIR MIXER,
    Zone1WindACOAMixer,            ! name
    Zone1WindACOAMixerOutletNode,  ! mixer outlet node
    Zone1WindACOAInNode,           ! mixer OA node
    Zone1WindACExhNode,            ! mixer relief node
    Zone1WindACAirInletNode;       ! mixer inlet node
```

Group – Zone Equipment

There are five main zone equipment statements that must be used to describe a block of zone equipment as shown in (Figure 21. Zone Equipment Input Syntax Map).

Types of Zone equipment are listed below and shown in (Figure 22. Zone Equipment).

AIR DISTRIBUTION UNITs

Single Duct Constant Volume Reheat

Single Duct VAV Reheat

Dual Duct Constant Volume

Dual Duct VAV

Powered Induction Units (Series and Parallel)

LOCAL CONVECTIVE UNITs

Purchased Air

Direct Air

Fan Coil Units

Window AC

Unit Ventilator/Heater

RADIATIVE CONVECTIVE UNITs

Baseboard

Zone Equipment Loop Input Structure/Map

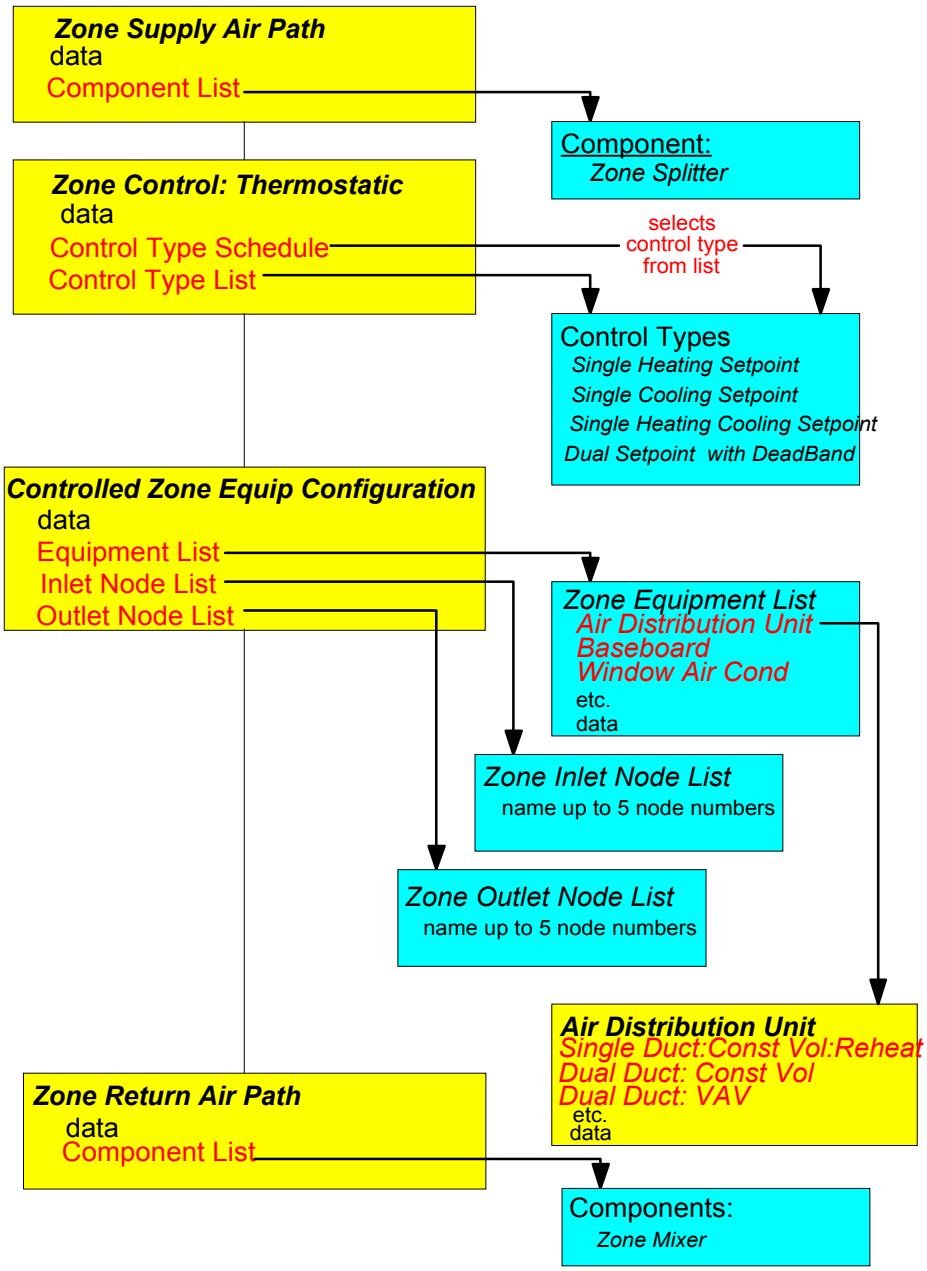

Figure 21. Zone Equipment Input Syntax Map

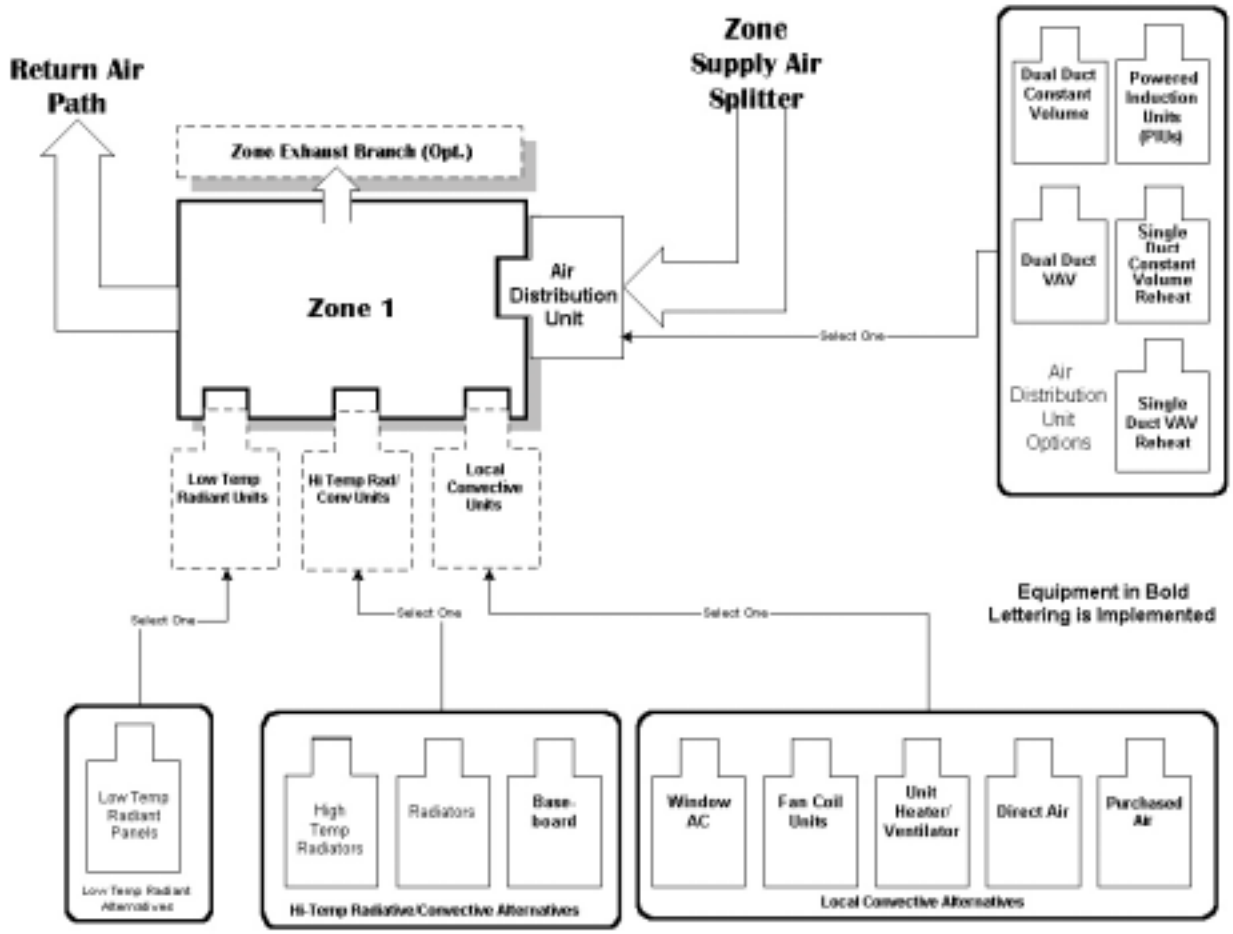

Figure 22. Zone Equipment

The following figure (Air Loop/Zone Equipment Node Diagram) illustrates the connection between the zone equipment and the air loop systems.

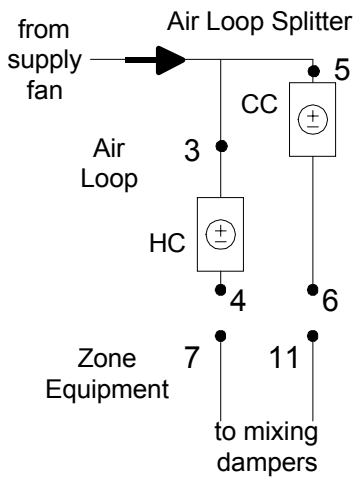

Figure 23. Air Loop/Zone Equipment Node Diagram

Each zone served by an HVAC system must have three additional statements to complete the zone equipment specification. An AIR DISTRIBUTION UNIT allows equipment typically found within the zone inlet ductwork (such as dampers, reheat coils, etc.) to be attached to the supply air stream for a particular zone. A ZONE CONTROL statement will allow the conditions in the zone to be managed. Finally, a CONTROLLED ZONE EQUIP CONFIGURATION statement describes all of the pertinent information about the zone from an HVAC perspective. Each of these statements is described in more detail below.

Air Distribution Unit

The AIR DISTRIBUTION UNIT statement gives further information on what air loop equipment will be serving a particular zone. The Air Distribution Unit is the part of the system that is supplied from a common main air handler simulated in the Air Loop Simulation and includes the equipment that controls or tempers the air going to each individual zone according to the desired thermostatic control. The current options for Air Distribution Units are:

```
DUAL DUCT:CONST VOLUME
DUAL DUCT:VAV
SINGLE DUCT:CONST VOLUME:REHEAT
SINGLE DUCT:VAV:REHEAT
SINGLE DUCT:SERIES PIU:REHEAT
SINGLE DUCT:PARALLEL PIU:REHEAT
```

Connections between the air distribution unit, the supply air duct, and the zone are specified in the input syntax for the air distribution unit and the zone splitter. The input syntax also explicitly defines an outlet identifier. This implies a connection to a zone through a NODE LIST for zone inlets (see the CONTROLLED ZONE EQUIP CONFIGURATION statement). The air distribution unit is limited to one combined component-controller unit; because controls are normally based on the zone thermostat and can work in parallel or series in complex fashion. Since the control and the flow resolution can be complex, each air distribution unit is unique in addressing these combinations and therefore only one is allowed per zone.

Field: Air Distribution Unit Name

Unique identifying name of the air distribution unit.

Field: Air_Dist_Unit_Outlet_Node_Name

Outlet node name for the air distribution unit to the attached zone.

Field: KEY--System Component Type 1

Single combined component/controller unit for that attached zone. Selection of components as listed above.

Field: Component Name 1

The unique identifying component name.

```
! AIR DISTRIBUTION UNIT,
  A1 , \field Air Distribution Unit Name
  A2 , \field Air Dist Unit Outlet Node Name
! A typical set of components for an air distribution unit will
! consist of a single component Air Distribution Unit (ADU)
  A3 , \field KEY--System Component Type 1
  A4 ; \field Component Name 1
```

An example of this statement in an IDF is:

```
AIR DISTRIBUTION UNIT,
        Zone1TermReheat,
        Zone 1 Reheat Air Outlet Node,
        SINGLE DUCT:VAV:REHEAT,
        Zone 1 VAV System;
```

Zone Control:Thermostatic

The Zone Control is a way for the zone to be controlled to a specified temperature. The schedule and the list of control type/name pairs are directly related. The schedule will consist of a control type that defines the type of control that is to be used during that hour for that zone. Thus, if the schedule defined elsewhere in the input file and referenced in the ZONE CONTROL statement has a value of 4 for a particular hour, this indicates that during that hour dual setpoint with deadband control is to be used. The exact dual setpoint with deadband control to be used would be determined by the list of control type/name pairs. The control types in this list of pairs would be one of the keywords associated with the 4 different control types (see below) with the name identifying which of these types was indicated. Because only one control can be specified for each control type in a ZONE CONTROL statement, there are only four pairs possible in a particular ZONE CONTROL type/name list. This is because individual controls can be defined hourly, thus giving the user a full range of flexibility.

Field: Thermostat Name

Unique identifying name for the thermostat.

Field: Zone Name

Name of the zone that is being controlled.

Field: Control Type SCHEDULE Name

Schedule which defines what type of control is active during each hour of the simulation.

Field Set (Control Type, Control Type Name)

Field: Control Type #1

There are currently 5 control types: uncontrolled, single cooling setpoint, single heating and cooling setpoint, and dual setpoint with deadband. Further explanation for each is given below.

Field: Control Type Name #1

Unique control type name

```
ZONE CONTROL:THERMOSTATIC,
  A1 , \field Thermostat Name
  A2 , \field Zone Name
       \type object-list
       \object-list ZoneNames
  A3 , \field Control Type SCHEDULE Name
       \type object-list
       \object-list ScheduleNames
  A4 , \field Control Type #1
       \type choice
       \key Single Heating Setpoint
       \key Single Cooling SetPoint
       \key Single HeatCool Setpoint
       \key Dual Setpoint with Deadband
  A5 , \field Control Type Name #1
       \type object-list
       \object-list ControlTypeNames
  A6 , \field Control Type #2
       \type choice
       \key Single Heating Setpoint
       \key Single Cooling SetPoint
       \key Single HeatCool Setpoint
       \key Dual Setpoint with Deadband
  A7 , \field Control Type Name #2
       \type object-list
       \object-list ControlTypeNames
  A8 , \field Control Type #3
       \type choice
       \key Single Heating Setpoint
       \key Single Cooling SetPoint
       \key Single HeatCool Setpoint
       \key Dual Setpoint with Deadband
  A9 , \field Control Type Name #3
       \type object-list
       \object-list ControlTypeNames
  A10, \field Control Type #4
       \type choice
       \key Single Heating Setpoint
       \key Single Cooling SetPoint
       \key Single HeatCool Setpoint
       \key Dual Setpoint with Deadband
  A11; \field Control Type Name #4
       \type object-list
       \object-list ControlTypeNames
```

An example of this statement in an IDF, along with the ScheduleType statement, is:

```
ScheduleType,Control Type,0:4,DISCRETE;
ZONE CONTROL:THERMOSTATIC, Zone 3 Thermostat, NORTH ZONE,
        Zone Control Type Sched,
        DUAL SETPOINT WITH DEADBAND, VAV Setpoints;
```

The syntax for each of the four different ZONE CONTROL types is shown in the Zone Thermostats section.

Controlled Zone Equip Configuration

Finally, the CONTROLLED ZONE EQUIP CONFIGURATION statement defines the remaining details about each thermal zone from an HVAC perspective (besides the controls which were defined above). As with other statements, the first two items in this object are the keyword and an identifying name which links the zone back to its geometrical input, internal gains, etc. and other statements in the HVAC section of the input. The next three items are names of lists (equipment, inlet nodes, and exhaust nodes) that are described in more detail below. Note that if there are no exhaust branches from the zone that field is left blank. Finally, two node names are necessary to complete the zone-HVAC description. The first node is the main air node for the zone upon which the air heat balance is performed. The other node defines the return air path from the zone.

Field: Zone Name

Name links this equipment list back to the heat balance for the zone.

Field: List Name: Zone Equipment

List of zone equipment for this zone. This list will consist of air distribution units or other direct convection or radiant equipment, i.e. window air conditioner, baseboard, fan coils, etc.

Field: List Name: Zone Inlet Nodes

There can be more that one inlet node depending on how many pieces of equipment are in the Zone Equipment List.

Field: Zone Exhaust Branch List Name

List of exhaust nodes leaving the zone for exhaust fans, zone energy recovery, etc.

Field: Zone Air Node Name

Currently the zone assumes a well-stirred model and therefore one zone node describes the air node in the zone.

Field: Zone Return Air Node Name

The name of the return air node which attached the zone to the return air path described above.

```
CONTROLLED ZONE EQUIP CONFIGURATION,
  A1 , \field Zone Name
       \type object-list
       \object-list ZoneNames
  A2 , \field List Name: Zone Equipment
  A3 , \field List Name: Zone Inlet Nodes
  A4,  \field Zone Exhaust Branch List Name
       \reference BranchLists
  A5 , \field Zone Air Node Name
  A6 ; \field Zone Return Air Node Name
```

An example of this statement in an IDF is:

```
CONTROLLED ZONE EQUIP CONFIGURATION,
            RUSS RESISTIVE ZONE,
            Zone1Equipment,
            Zone1Inlets,
            ,
            Zone 1 Node,
            Zone 1 Outlet Node;
```

Zone Equipment List

The first list encountered in the CONTROLLED ZONE EQUIP CONFIGURATION statement is the ZONE EQUIPMENT LIST. As with most lists in the EnergyPlus input scheme, there is the defining keyword and an identifying name. In the case of the zone equipment list, each item in the list has four fields associated with it. The first two are the typical type keyword and identifying name pair. The remaining two items help define the cooling and heating priority of that piece of equipment, respectively. The priorities should be integers with a “1” being the highest priority, a “2” being the next highest priority, etc. Since there are separate inputs for heating and cooling, equipment can be prioritized appropriately for the different conditioning seasons. Note that an AIR DISTRIBUTION UNIT must be listed in this statement if there is a forced air system serving the zone from the air loop.

Field: Name

Unique identifying name.

Field Set (Key, Type Name, Cooling Priority, Heating Priority) up to 15

This set is used together in order to prioritize the equipment for heating and cooling. The #1 priority equipment will try to meet the entire demand with its capacity and then pass the results on to the #2 and so on for both heating and cooling.

Field: KEY--Zone Equipment Type 1

Unique name of the zone equipment.

Field: Type Name 1

Type of zone equipment such as air distribution unit, baseboard, window air conditioner, etc.

Field: Cooling Priority

Sets the first, second, third, etc. cooling priority for the piece of equipment described.

Field: Heating Priority

Sets the first, second, third, etc. heating priority for the piece of equipment described.

```
ZONE EQUIPMENT LIST,
  A1 , \field Name
   !List equipment in simulation order]
  A2 , \field KEY--Zone Equipment Type 1
  A3 , \field Type Name 1
  N1 , \field Cooling Priority
  N2 , \field Heating Priority
  A4 , \field KEY--Zone Equipment Type 2
  A5 , \field Type Name 2
  N3 , \field Cooling Priority
  N4 , \field Heating Priority
  A6 , \field KEY--Zone Equipment Type 3
  A7 , \field Type Name 3
  N5 , \field Cooling Priority
  N6 , \field Heating Priority
  A8 , \field KEY--Zone Equipment Type 4
  A9 , \field Type Name 4
  N7 , \field Cooling Priority
  N8 , \field Heating Priority
  A10, \field KEY--Zone Equipment Type 5
  A11, \field Type Name 5
  N9 , \field Cooling Priority
  N10, \field Heating Priority
  A12, \field KEY--Zone Equipment Type 6
  A13, \field Type Name 6
  N11, \field Cooling Priority
  N12, \field Heating Priority
  A14, \field KEY--Zone Equipment Type 7
  A15, \field Type Name 7
  N13, \field Cooling Priority
  N14, \field Heating Priority
 -- reduced for brevity – 15 allowed
```

An example of this statement in an IDF is:

```
ZONE EQUIPMENT LIST, Zone1Equipment,
        AIR DISTRIBUTION UNIT, Zone1DualDuct, 1, 1;
```

The Zone Inlets and Zone Exhaust are specified in a normal NODE LIST statement, named such that the CONTROLLED ZONE EQUIP CONFIGURATION can find them.

For example, in the IDF:

```
NODE LIST,
       Zone1Inlets,
       Zone 1 Reheat Air Outlet Node;

    NODE LIST,
       Zone2Inlets,
Zone 2 Reheat Air Outlet Node;

    NODE LIST,
       Zone3Inlets,
       Zone 3 Reheat Air Outlet Node;
```

Group – Air Path

Zone Supply Air Path, Zone Return Air Path

The zone supply and zone return air paths are used to split and then combine the supply air from the main air handler linked to a common air loop to serve each individual zone. The zone supply air path consists of a zone splitter that is used to branch the main supply air stream(s) off to the different zones. Conversely, the zone-return air path consists of a mixer that is used to accumulate the return air stream(s) coming back from the different zones. The individual zones will connect through these two statements with the implied link to the splitter outlets and the mixer inlets. For dual duct systems, there will be splitters for both the cold and hot air ducts on the supply side and plenums and one mixer on the return air side per air loop. The zone supply plenum allows system air to be distributed through a zone before it reaches the zones to be served. The zone supply plenum still needs a zone splitter to connect to the individual zones. The return plenum allows system air to be mixed from the zone/s as well as the typical ducted zone air returns. The zone return plenum still needs a mixer if there is more than one being connected back to the air loop simulation. Below are the descriptions of the zone supply and return path statements. Note that each statement type has an identifying name, a single inlet/outlet node number, and a list of component type/name pairs. You can have only one mixer or splitter that is part of the zone air path per air loop. For more information on the plenum, reference the Zone Supply Plenum and Zone Return Plenum objects.

Zone Supply Air Path

Zone Splitter or Zone Supply Plenum components to split the air from the air loop simulation from each duct to each individual zone being served.

Field: Supply Air Path Name

Unique name to identify the supply air path, i.e. Main Hot Air Inlet.

Field: Supply Air Path Inlet Node

The node on the Zone Equipment side attached to the inlet of the zone splitter or zone supply plenum.

Field: KEY--System Component Type 1

Component list for the supply air path. Only zone splitters and zone supply plenums are allowed. The last component must be the zone splitter.

Field: Component Name 1

Unique Zone Splitter or Zone Supply Plenum names in the supply air path.

Zone Return Air Path

Zone Mixer or Zone Return Plenum components that make up the return air path from each individual zone back to the main air loop simulation.

Field: Return Air Path Name

Unique name to identify the return air path.

Field: Return Air Path Outlet Node

The node that is the outlet to the air loop simulation from the mixer.

Field: KEY--System Component Type 1

Component list for the return air path. Only zone mixers and zone return plenums are allowed.

Field: Component Name 1

Unique Zone Mixer or Zone Return Plenum names in the return air path.

```
ZONE SUPPLY AIR PATH,
  A1 , \field Supply Air Path Name
  A2 , \field Supply Air Path Inlet Node
! A supply air path can only consist of one splitter
  A3 , \field KEY--System Component Type 1
  A4 , \field Component Name 1
```

```
ZONE RETURN AIR PATH,
  A1 , \field Return Air Path Name
  A2 , \field Return Air Path Outlet Node
! A return air path can only consist of mixers and plenums
  A3 , \field KEY--System Component Type 1
  A4 , \field Component Name 1
```

An example of this statement in an IDF is:

```
ZONE SUPPLY AIR PATH, HotAirSupplyPath, Main Hot Air Inlet, Zone Splitter, ZoneHotAirSupplySplitter;
ZONE SUPPLY AIR PATH, ColdAirSupplyPath, Main Cold Air Inlet, Zone Splitter, ZoneColdAirSupplySplitter;
ZONE RETURN AIR PATH, DualDuctReturnPath, Return Air Mixer Outlet, Zone Mixer, ZoneReturnAirMixer;
```

Zone Return Plenum

The simple building shown in the figure below, consists of a controlled zone, and a return plenum zone which is used for the return air. This simple configuration contains a ground floor controlled zone with a window and a return plenum zone which handles the roof load. The return air plenum is unique since there is a heat balance connection and building description, and a system airflow connection which transfers the airflow directly from the controlled zone to the return plenum zone through the system air simulation. The input described in this section is mainly just for the system airflow connections in the HVAC algorithms. In addition the return plenum zone must be fully input in the building zone description. The return plenum zone description needs to contain the wall descriptions, the interzone ceiling and floor, and for this simple case the roof. All the other attributes of a zone that can be specified in the building description can be utilized with a return plenum zone if necessary, i.e. scheduled loads, windows, etc.

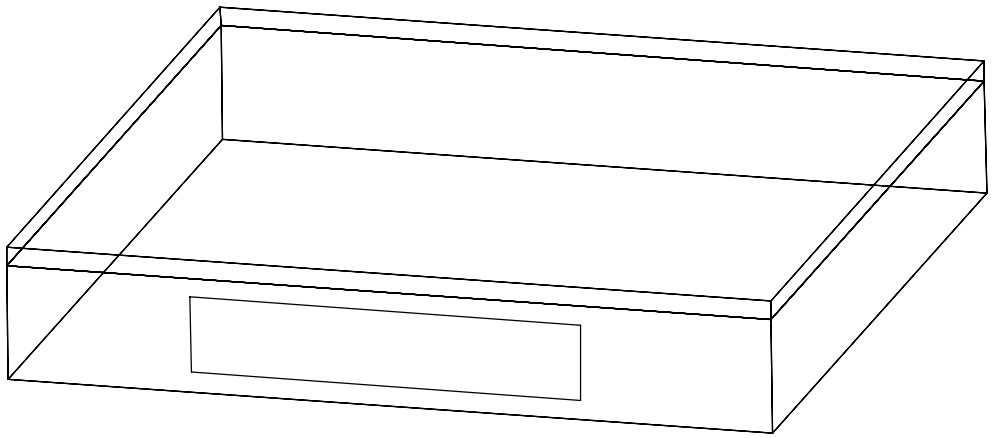

Figure 24. Illustration of Zone Return Plenum

After all the building zone attributes are specified, then the zone return plenum is specified to connect the zone to the system simulation. To complete the return air path from the controlled zone to the air loop, the zone return plenum component is added and all of the zone return plenums are attached to the mixer. The Zone Return Air Path needs to include the Zone Return Plenum as a component. Refer to the Zone Return Air Path for an explanation of that syntax.

Field: Zone Return Plenum Name

A unique identifying name identifying the zone return plenum system component.

Field: Zone Name

The zone name specified in the heat balance portion of the input. This piece of input connects the zone return plenum system component to the heat balance data structure.

Field: Zone Node Name

The name of the zone node. The zone node name connects the heat balance data structure to the system airflow data structure through this node.

Field: Outlet_Node

The name of the zone outlet node. For the zone return plenum there is only one outlet node that can be specified.

Field: Inlet_Node

The name of the zone inlet node. The zone return plenum component can collect air from many other zones, therefore there are multiple zone inlet node specifications that can be made. Currently this value is 30 per air loop but this can easily be extended by adding more inlet nodes in the Energy+.idd.

```
ZONE RETURN PLENUM,
       \memo Connects N Zone Inlet Air Streams, through Zone Return Plenum, to Outlet (currently 30 per
air loop)
   A1, \field Zone Plenum Name
   A2, \field Zone Name
   A3, \field Zone Node Name
   A4, \field Outlet_Node
   A5, \field Inlet_Node_1
   A6, \field Inlet_Node_2
   A7, \field Inlet_Node_3
            .
            .
            .
   A34; \field Inlet_Node_30
```

And, an IDF example of a zone return plenum component specification:

```
ZONE RETURN PLENUM,
            Zone 1a Plenum, ! Zone Plenum Name
            ZONE 1a, ! Zone Name
            Zone 1a Node, ! Zone Node Name
            Zone 1a Plenum Outlet Node, ! Outlet_Node
            Zone 1 Outlet Node; ! Inlet_Node_1
```

Below is an example of the Zone Return Air Path for this simple zone shown above.

```
ZONE RETURN AIR PATH,
            TermReheatReturnPath,
            Return Air Mixer Outlet,
            Zone Return Plenum, Zone 1a Plenum,
            Zone Mixer, Zone Return Air Mixer;
```

Zone Supply Plenum

The building shown in the figure below consists of three controlled zones served by a zone supply plenum beneath the floor.

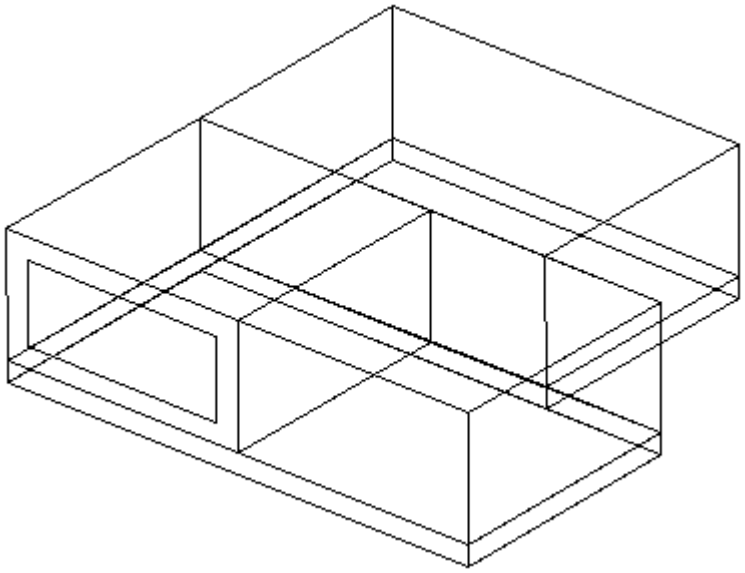

Figure 25. Illustration of Zone Supply Plenum

The zone supply plenum has a heat balance connection and building description, and a system airflow connection which transfers the airflow directly from the supply plenum zone to the controlled zones through the system air simulation. The input described in this section is mainly just for the

system airflow connections in the HVAC algorithms. In addition the supply plenum zone must be fully input in the building zone description. The supply plenum zone description needs to contain the wall descriptions, the interzone ceiling and floor, and the ground connection. All the other attributes of a zone that can be specified in the building description can be utilized with a supply plenum zone if necessary, i.e. scheduled loads, windows, etc.

After all the building zone attributes are specified, then the zone supply plenum is specified to connect the zone to the system simulation. The zone supply plenum component is inserted in the supply air path before the zone splitter. Zone supply plenums are only allowed in a single duct system. Only one zone supply plenum is allowed per air loop. The zone splitter must always be the last component in the supply air path. Refer to the Zone Supply Air Path for an explanation of that syntax.

Field: Zone Supply Plenum Name

A unique identifying name identifying the zone supply plenum system component.

Field: Zone Name

The zone name specified in the heat balance portion of the input. This piece of input connects the zone supply plenum system component to the heat balance data structure.

Field: Zone Node Name

The name of the zone node. The zone node name connects the heat balance data structure to the system airflow data structure through this node.

Field: Inlet _Node

The name of the zone inlet node. For the zone supply plenum there is only one inlet node that can be specified.

Field: Outlet_Node

The name of the zone outlet node. The zone supply plenum component can only connect to a zone splitter. Therefore, only one outlet node can be specified.

```
ZONE SUPPLY PLENUM,
       \memo Connects 1 Zone Inlet Air Stream, through Zone Supply Plenum, to 1 Outlet
   A1, \field Zone Plenum Name
   A2, \field Zone Name
   A3, \field Zone Node Name
   A4, \field Inlet_Node
   A5; \field Outlet_Node
```

And, an IDF example of a zone supply plenum component specification:

```
ZONE SUPPLY PLENUM,
    Supply Plenum 1, ! Zone Return Plenum Name
    SUPPLY PLENUM ZONE, ! Zone Name
    Supply Plenum 1 Zone Node, ! Zone Node Name
    Zone Equipment Inlet Node, ! Inlet_Node
    Supply Plenum 1 Outlet Node; ! Outlet_Node
```

Below is an example of the Zone Supply Air Path for the building shown above.

```
ZONE SUPPLY AIR PATH,
    TermReheatSupplyPath,
    Zone Equipment Inlet Node,
    Zone Supply Plenum, Supply Plenum 1,
    Zone Splitter, Zone Supply Air Splitter;
```

Zone Mixer, Zone Splitter

ZONE MIXERs and ZONE SPLITTERs are only allowed in the supply air path and the return air path. There is only one ZONE SPLITTER allowed per SUPPLY AIR PATH and this splitter only contains node connection information. The zone splitter does a very important job in the supply air path. It passes the required flow information back to the supply air inlet so that the air loop simulation knows how much flow is required per branch. When the flow information is known per leg of the splitter the property information can be allocated accordingly. The mixer does a very simple job of recombining properties and the flows from each zone and aggregates them for return to the air loop.

Zone Splitter

Component that splits flow from the air loop simulation to each zone. The control of the flow is normally determined downstream of the splitter, therefore the splitter component has a very important job in the simulation to pass mass flow information upstream to the air loop simulation and fluid property information downstream

Field: Splitter Name

Unique Zone Splitter name.

Field: Inlet_Node

There is one unique inlet node per splitter from the air loop simulation and this node is specified in the input.

Field: Outlet_Node_Number_1 (up to 50 allowed)

These are all of the outlet node names from the splitter leading to each zone.

```
ZONE SPLITTER,
 ! [Split One Air Stream Into N outlet streams(currently 50 per air loop)]
   A1    [Splitter Name],
   A2, \field Inlet_Node
   A3, \field Outlet_Node_Number_1
   A4, \field Outlet_Node_Number_2
   A5, \field Outlet_Node_Number_3
   A6, \field Outlet_Node_Number_4
   A7, \field Outlet_Node_Number_5
   A8, \field Outlet_Node_Number_6
           .
           .
           .
```

Zone Mixer

The Zone Mixer takes the air from the zone and mixes the streams together to be returned to the air loop simulation. This is a simple process of summing flows and averaging the air properties.

Field: Mixer Name

Unique Zone Mixer name.

Field: Outlet_Node

The name of the outlet node leading to the air loop simulation.

Field: Inlet_Node_Number_1 (up to 50 allowed)

All of the node names that are coming from each zone on the return air side.

```
ZONE MIXER,
 ! [Mix N Inlet Air Streams into One(currently 50 per air loop)]
   A1    [Mixer Name],
   A2, \field Outlet_Node
   A3, \field Inlet_Node_Number_1
   A4, \field Inlet_Node_Number_2
   A5, \field Inlet_Node_Number_3
   A6, \field Inlet_Node_Number_4
   A7, \field Inlet_Node_Number_5
           .
           .
           .
```

The sample syntax is shown below.

```
ZONE SPLITTER, Zone Supply Air Splitter,
         Zone Equipment Inlet Node,    ! inlet node
         Zone 1 Damper Inlet Node,     ! outlet Nodes
         Zone 2 Damper Inlet Node,
         Zone 3 Damper Inlet Node;
```

```
ZONE MIXER, Zone Return Air Mixer,
         Return Air Mixer Outlet Node, ! outlet Node
         Zone 1 Outlet Node,           ! inlet nodes
         Zone 2 Outlet Node,
         Zone 3 Outlet Node;
```

Group – Zone Thermostats

The syntax for the current set of four zone thermostats is given below. In each case, the keyword is accompanied by an identifying name and either one or two schedule names (depending on whether the control is a single or dual setpoint control). The schedule defines a temperature setpoint for the control type. The schedule would be defined through the standard schedule syntax described earlier in this document.

Single Heating Setpoint

This would be for a heating only thermostat. The setpoint can be scheduled and varied throughout the simulation but only heating is allowed with this control type.

Field: Name

Unique name for this control type.

Field: Setpoint Temperature SCHEDULE Name

The name of the associated schedule.

Single Cooling Setpoint

This would be for a cooling only thermostat. The setpoint can be scheduled and varied throughout the simulation but only cooling is allowed.

Field: Name

Unique name for this control type.

Field: Setpoint Temperature SCHEDULE Name

The name of the associated schedule.

Single Heating Cooling Setpoint

This would be for heating and cooling thermostat but only heating or cooling can be scheduled at any given time period. The setpoint can be scheduled and varied throughout the simulation for both heating and cooling.

Field: Name

Unique name for this control type.

Field: Setpoint Temperature SCHEDULE Name

The name of the associated schedule.

Dual Setpoint with Deadband

This would be for heating and cooling thermostat where both a heating and cooling setpoint can be scheduled for any given time period. The setpoint can be scheduled and varied throughout the simulation for both heating and cooling.

Field: Name

Unique name for this control type.

Field: Setpoint Temperature SCHEDULE Name

The name of the associated schedule.

Field: Heating Setpoint Temperature SCHEDULE Name

The heating temperature schedule.

Field: Cooling Setpoint Temperature SCHEDULE Name

The cooling temperature schedule.

```
SINGLE HEATING SETPOINT,
  A1 , \field Name
  A2 ; \field Setpoint Temperature SCHEDULE Name

SINGLE COOLING SETPOINT,
  A1 , \field Name
  A2 ; \field Setpoint Temperature SCHEDULE Name

SINGLE HEATING COOLING SETPOINT,
  A1 , \field Name
  A2 ; \field Setpoint Temperature SCHEDULE Name

DUAL SETPOINT WITH DEADBAND,
  A1 , \field Name
  A2 , \field Heating Setpoint Temperature SCHEDULE Name
  A3 ; \field Cooling Setpoint Temperature SCHEDULE Name
```

Examples of these statements in an IDF are:

```
SINGLE HEATING SETPOINT, Heating Setpoint with SB, Heating Setpoints;
SINGLE COOLING SETPOINT, Cooling Setpoint with SB, Cooling Setpoints;
SINGLE HEATING COOLING SETPOINT, Heating Cooling Setpoint Sched, Heating Cooling Setpoints;
DUAL SETPOINT WITH DEADBAND, VAV Setpoints, Heating Setpoints, Cooling Setpoints;
```

Group – Coils

Several different COILs may be added to zone equipment and air loops. This includes simple heating (gas, electric, and hot water) and a simple water-cooling coil as well as a more detailed flat fin water-cooling coil model. In general, the heating coil description can be used for a heating coil, a reheat coil, or a preheat coil in the air loop simulation or for zone equipment. Figure 26 is an example of a heating and cooling coil in the air loop simulation in a dual duct system. This does show the basic node structure that will be referenced in the input description. The figure does show water coils since they are the most complex to input in the simulation compared to the Electric and Gas coils which only have air connections.

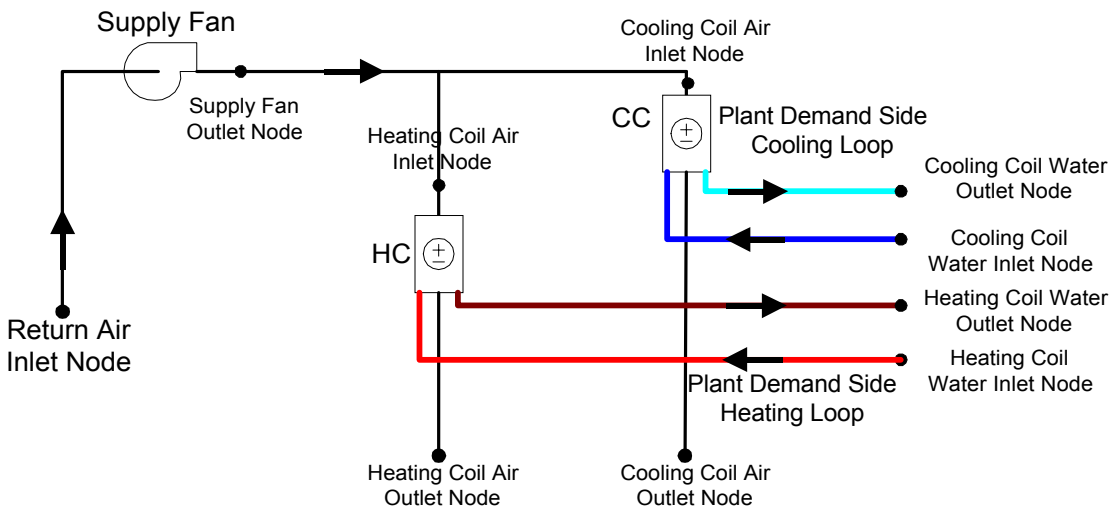

Figure 26. Example Air Loop Heating & Cooling Coil

Coil:Water:SimpleCooling

The simple water coil model is useful when not much detail about the physical makeup of the coil is known. When more detail about the coil can be obtained, the more detailed water coil model may be used. As can be seen below, the detailed flat fin cooling coil model requires significantly more input for the physical description of the model. The simple cooling coil uses the Effectiveness-NTU algorithm and assumes a cross-flow heat exchanger.

Field: Coil Name

A unique identifying name for each coil.

Field: Available Schedule

Schedule which defines when the coil is available.

Field: UA of the Coil

The UA value for the coil needed for the Effectiveness-NTU heat exchanger model.

Field: Max Water Flow Rate of Coil

The maximum possible water/refrigerant flow rate (kg/sec) through the coil.

Field: Leaving Relative Humidity of Coil

This is the value of the Relative Humidity (decimal, not percent) that the air will leave the coil and defines the latent removal capability of the coil as a set value. This is used when you do not have enough information to supply to a detailed coil model that more accurately simulates the latent heat removal.

Field: Coil_Water_Inlet_Node

The name of the water coil inlet from the chilled water loop, i.e. Cooling Coil Water Inlet Node.

Field: Coil_Water_Outlet_Node

The name of the water coil outlet from the chilled water loop, i.e. Cooling Coil Water Outlet Node.

Field: Coil_Air_Inlet_Node

The name of the air inlet to the water coil, i.e. Cooling Coil Air Inlet Node.

Field: Coil_Air_Outlet_Node

The name of the air outlet from the water coil, i.e. Cooling Coil Air Outlet Node.

```
COIL:Water:SimpleCooling,
  A1 , \field Coil Name
  A2 , \field Available Schedule
       \type object-list
       \object-list ScheduleNames
  N1 , \field UA of the Coil
  N2 , \field Max Water Flow Rate of Coil
       \units kg/sec
  N3 , \field Leaving Relative Humidity of Coil
       \maximum 1.0
       \minimum 0.0
       \default 0.9
  A3 , \field Coil_Water_Inlet_Node
  A4 , \field Coil_Water_Outlet_Node
  A5 , \field Coil_Air_Inlet_Node
  A6 ; \field Coil_Air_Outlet_Node
```

Simple Cooling Water Coil Outputs

```
HVAC,Sum, Total Water Cooling Coil Energy[J]
HVAC,Sum,Sensible Water Cooling Coil Energy[J]
HVAC,Average,Total Water Cooling Coil Rate[W]
HVAC,Average,Sensible Water Cooling Coil Rate[W]
```

Coil:Water:SimpleHeating

The simple heating coil model only does sensible heating of the air. The simple heating coil uses the Effectiveness-NTU algorithm and assumes a cross-flow heat exchanger.

Field: Coil Name

A unique identifying name for each coil.

Field: Available Schedule

Schedule that defines when the coil is available.

Field: UA of the Coil

The UA value for the coil needed for the Effectiveness-NTU heat exchanger model.

Field: Max Water Flow Rate of Coil

The maximum possible water flow rate (kg/sec) through the coil.

Field: Coil_Water_Inlet_Node

The name of the water coil inlet from the chilled water loop, i.e. Heating Coil Water Inlet Node.

Field: Coil_Water_Outlet_Node

The name of the water coil outlet from the chilled water loop, i.e. Heating Coil Water Outlet Node.

Field: Coil_Air_Inlet_Node

The name of the air inlet to the water coil, i.e. Heating Coil Air Inlet Node.

Field: Coil_Air_Outlet_Node

The name of the air outlet from the water coil, i.e. Heating Coil Air Outlet Node.

```
COIL:Water:SimpleHeating,
  A1 , \field Coil Name
  A2 , \field Available Schedule
       \type object-list
       \object-list ScheduleNames
  N1 , \field UA of the Coil
  N2 , \field Max Water Flow Rate of Coil
       \units kg/sec
  A3 , \field Coil_Water_Inlet_Node
  A4 , \field Coil_Water_Outlet_Node
  A5 , \field Coil_Air_Inlet_Node
  A6 ; \field Coil_Air_Outlet_Node
```

Simple Heating Water Coil Outputs

```
HVAC,Sum, Total Water Heating Coil Energy[J]
HVAC,Average,Total Water Heating Coil Rate[W]
```

Coil:Electric:Heating

The Electric heating coil is a simple capacity model with a user-inputted efficiency. In many cases, this efficiency for the electric coil will be 100%. This coil will be simpler than shown in Figure 26 since it will only have air nodes to connect it in the system. The coil can be used in the air loop simulation or in the zone equipment as a reheat coil. Depending on where it is used determines if this coil is temperature or capacity controlled. If used in the air loop simulation it will be controlled to a specified temperature scheduled from the SetPoint Manager. If it is used in zone equipment, it will be controlled from the zone thermostat by meeting the zone demand.

Field: Coil Name

A unique identifying name for each coil.

Field: Available Schedule

Schedule that defines when the coil is available.

Field: Efficiency of the Coil

This is user-inputted efficiency (decimal units, not percent) and can account for any loss. In most cases for the electric coil, this will be 100%.

Field: Nominal Capacity of the Coil

This is the maximum capacity of the coil (W). This controlled coil will only provide the needed capacity to meet the control criteria whether it is temperature or capacity controlled.

Field: Coil_Air_Inlet_Node

The name of the air inlet to the water coil, i.e. Heating Coil Air Inlet Node.

Field: Coil_Air_Outlet_Node

The name of the air outlet from the water coil, i.e. Heating Coil Air Outlet Node.

Field: Coil_Temp_Setpoint_Node

If the coil is used in the air loop simulation and is temperature controlled by the SetPoint Manager then the node that is the control node needs to be specified here.

```
COIL:Electric:Heating,
  A1 , \field Coil Name
  A2 , \field Available Schedule
       \type object-list
       \object-list ScheduleNames
  N1 , \field Efficiency of the Coil
       \maximum 1.0
       \minimum 0.0
       \default 1.0
  N2 , \field Nominal Capacity of the Coil
       \units W
  A3 , \field Coil_Air_Inlet_Node
  A4 , \field Coil_Air_Outlet_Node
  A5 ; \field Coil_Temp_Setpoint_Node
    \note optional if coil is temp and not load controlled
```

Electric Heating Coil Outputs

```
HVAC,Sum,Heating Coil Energy[J]
HVAC,Average,Heating Coil Rate[W]
HVAC,Sum,Heating Coil Electric Consumption [J]
HVAC,Average,Heating Coil Electric Power [W]
```

Coil:Gas:Heating

The Gas heating coil is a simple capacity model with a user inputted gas burner efficiency. The default for the gas burner efficiency is 80%. This coil will be simpler than shown in Figure 26 since it will only have air nodes to connect it in the system. The coil can be used in the air loop simulation or in the zone equipment as a reheat coil. Depending on where it is used determines if this coil is temperature or capacity controlled. If used in the air loop simulation it will be controlled to a specified temperature scheduled from the SetPoint Manager. If it is used in zone equipment, it will be controlled from the zone thermostat by meeting the zone demand.

Field: Coil Name

A unique identifying name for each coil.

Field: Available Schedule

Schedule that defines when the coil is available.

Field: Gas Burner Efficiency of the Coil

This is user inputted gas burner efficiency (decimal, not percent) and is defaulted to 80%.

Field: Nominal Capacity of the Coil

This is the maximum capacity of the coil (W). This controlled coil will only provide the needed capacity to meet the control criteria whether it is temperature or capacity controlled.

Field: Coil_Air_Inlet_Node

The name of the air inlet to the water coil, i.e. Heating Coil Air Inlet Node.

Field: Coil_Air_Outlet_Node

The name of the air outlet from the water coil, i.e. Heating Coil Air Outlet Node.

Field: Coil_Temp_Setpoint_Node

If the coil is used in the air loop simulation and is temperature controlled by the SetPoint Manager then the node that is the control node needs to be specified here.

```
COIL:Gas:Heating,
  A1 , \field Coil Name
  A2 , \field Available Schedule
       \type object-list
       \object-list ScheduleNames
  N1 , \field Gas Burner Efficiency of the Coil
       \maximum 1.0
       \minimum 0.0
       \default 0.8
  N2 , \field Nominal Capacity of the Coil
       \units W
  A3 , \field Coil_Air_Inlet_Node
  A4 , \field Coil_Air_Outlet_Node
  A5 ; \field Coil_Temp_Setpoint_Node
   \note optional if coil is temp and not load controlled
```

Gas Heating Coil Outputs

```
HVAC,Sum,Heating Coil Energy[J]
HVAC,Average,Heating Coil Rate[W]
HVAC,Sum,Heating Coil Gas Consumption [J]
HVAC,Average,Heating Coil Gas Consumption Rate [W]
```

Coil:Water:DetailedFlatCooling

This detailed flat fin coil model is for continuous plate fins. First, found in Type 12 from MODSIM, but now programmed directly from Elmahdy, A.H. and Mitalas, G.P. Then there was a discontinuity in their original model that was fixed in the EnergyPlus implementation. Now this model can be used in an interval halving solution technique for controlling this coil without the problems of non-convergence.

The following figures illustrate the geometry and circuits in a cooling coil.

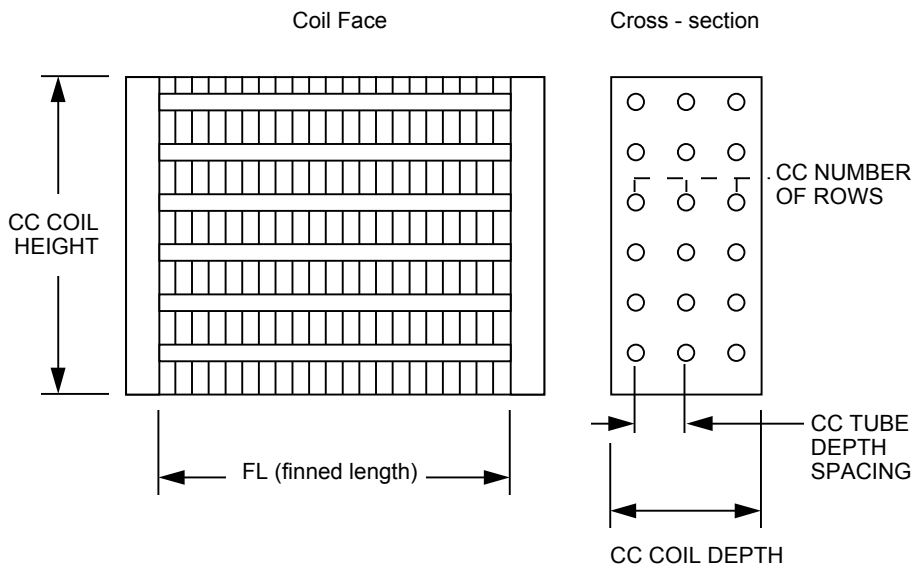

Figure 27. Geometry of a Cooling Coil (CC)

"A Model for Cooling and Dehumidifying Coils for Use in Energy Requirements for Buildings" ASHRAE Transactions, Vol. 83, Part 2, pp. 103-117 (1977). For fin efficiency see K.A. Gardner, "Efficiency of Extended ," Transactions ASME, Vol. 67, pp. 621-631, 1945.

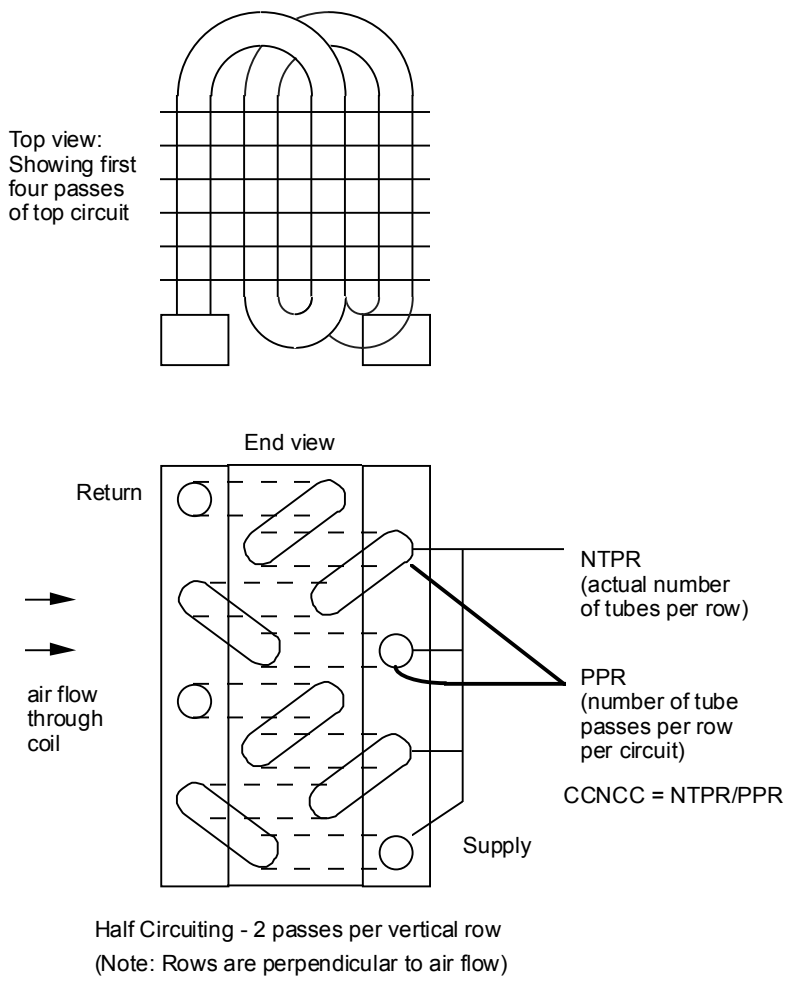

Figure 28.Number of Coolant Circuits (CCNCC)

Field: Coil Name

A unique identifying name for each coil.

Field: Available Schedule

Schedule that defines when the coil is available.

Field: Max Water Flow Rate of Coil

The maximum possible water flow rate (kg/sec) through the coil.

Field: Tube Outside Surf Area

The outside surface area (m^2) of the tubes that is exposed to air (i.e. the outside area of the unfinned tubes minus the area of tubes covered by the fins).

Field: Total Tube Inside Area

The total surface area (m^2) inside the tubes (water side).

Field: Fin Surface Area

The total surface area (m^2) of the fins attached to the coil.

Field: Minimum Air Flow Area

The minimum cross sectional area (m^2) available for air passage. Frequently calculated as

$$A_{min} = (A_{min}/A_{fr})*A_{fr}$$

where A_{fr} is the frontal area of the heat exchanger, and (A_{min}/A_{fr}) is the ratio of the minimum airflow area to frontal area.

Field: Coil Depth

The distance (m) from the front of the coil to the back of the coil in the airflow direction. Also called the fin depth. Illustrated in the figure (Figure 27. Geometry of a Cooling Coil (CC)).

Field: Fin Diameter

The outside diameter (m) of the fins. Used instead of COIL HEIGHT

Field: Fin Thickness

Thickness (m) of the air side fins.

Field: Tube Inside Diameter

The inside diameter (m) of the tubes.

Field: Tube Outside Diameter

The outside diameter (m) of the tubes.

Field: Tube Thermal Conductivity

The thermal conductivity (W/m-K) of the tube material.

Field: Fin Thermal Conductivity

The thermal conductivity (W/m-K) of the fin material.

Field: Fin Spacing

The spacing (m) of the fins, centerline to centerline.

Field: Tube Depth Spacing

The spacing (m) of the tube rows, centerline to centerline. Also called tube longitudinal spacing.

Field: Number of Tube Rows

The number of tube rows in the direction of the airflow.

Field: Number of Tubes per Row

The number of tubes per row. (NTPR in the above diagram)

Field: Coil_Water_Inlet_Node

The name of the water coil inlet from the chilled water loop, i.e. Cooling Coil Water Inlet Node.

Field: Coil_Water_Outlet_Node

The name of the water coil outlet from the chilled water loop, i.e. Cooling Coil Water Outlet Node.

Field: Coil_Air_Inlet_Node

The name of the air inlet to the water coil, i.e. Cooling Coil Air Inlet Node.

Field: Coil_Air_Outlet_Node

The name of the air outlet from the water coil, i.e. Cooling Coil Air Outlet Node.

```
COIL:Water:DetailedFlatCooling,
  A1 , \field Coil Name
  A2 , \field Available Schedule
       \type object-list
       \object-list ScheduleNames
  N1 , \field Max Water Flow Rate of Coil
       \units kg/sec
  N2 , \field Tube Outside Surf Area
       \units m2
       \note Tube Primary Surface Area
  N3 , \field Total Tube Inside Area
       \units m2
       \note Total Tube inside Surface Area
  N4 , \field Fin Surface Area
       \units m2
  N5 , \field Minimum Air Flow Area
       \units m2
  N6 , \field Coil Depth
       \units m
  N7 , \field Fin Diameter
       \units m
       \note Fin Diameter or the Coil Height
  N8 , \field Fin Thickness
       \units m
  N9 , \field Tube Inside Diameter
       \units m
       \note Inner diameter of Tubes
  N10, \field Tube Outside Diameter
       \units m
       \note Outer Diameter of the Tubes
  N11, \field Tube Thermal Conductivity
       \units W/m-K
  N12, \field Fin Thermal Conductivity
       \units W/m-K
  N13, \field Fin Spacing
       \units m
       \note Fin Spacing or Distance
  N14, \field Tube Depth Spacing
       \units m
  N15, \field Number of Tube Rows
  N16, \field Number of Tubes per Row
  A3 , \field Coil_Water_Inlet_Node
  A4 , \field Coil_Water_Outlet_Node
  A5 , \field Coil_Air_Inlet_Node
  A6 ; \field Coil_Air_Outlet_Node
```

Examples of these statements in an IDF are:

```
COIL:Water:SimpleCooling,
         Main Cooling Coil,        !Name of cooling coil
         CoolingCoilAvailSched,    !Cooling Coil Schedule
         3000.0,                   !UA of the Coil
         1.1,                      !Max Water Flow Rate of Coil kg/sec
         NODE_21, NODE_18,         !Coil Water Side Inlet & Outlet Node
         NODE_2, NODE_3;           !Coil Air Side Inlet & Outlet Node
COIL:Water:SimpleHeating,
         SimpleHeatingCoil,     !Name of heating coil
         FanAndCoilAvailSched,  !heating Coil Schedule
         1200.0,                !UA of the Coil
         4.3,                   !Max Water Flow Rate of Coil kg/sec
         NODE_27, NODE_26,      !Coil Water Side Inlet & Outlet Node
         NODE_3, NODE_4;        !Coil Air Side Inlet & Outlet Node
COIL:Water:DetailedFlatCooling,
      Detailed Cooling Coil,  !Name of cooling coil
      CoolingCoilAvailSched,  !Cooling Coil Schedule
      1.1,             !Max Water Flow Rate of Coil kg/sec
      6.23816,         !Tube Outside Surf Area
      6.20007018,      !Tube Inside Surf Area
      101.7158224,     !Fin Surf Area
      0.300606367,     !Min Air Flow Area
      0.165097968,     !Coil Depth
      0.43507152,      !Coil Height
      0.001499982,     !Fin Thickness
      0.014449958,     !Tube Inside Diameter
      0.015879775,     !Tube Outside Diameter
      0.385764854,     !Tube Thermal Conductivity
      0.203882537,     !Fin Thermal Conductivity
      0.001814292,     !Fin Spacing
      0.02589977,      !Tube Depth
      6,               !Number of Tube Rows
      16,              !Number of Tubes per Row
      NODE_32,NODE_33, !Coil Water Side Inlet & Outlet Node
      NODE_5, NODE_6;  !Coil Air Side Inlet & Outlet Node
```

Detailed Water Coil Outputs

```
HVAC,Sum,Total Water Cooling Coil Energy[J]
HVAC,Sum,Sensible Water Cooling Coil Energy[J]
HVAC,Average,Total Water Cooling Coil Rate[W]
HVAC,Average,Sensible Water Cooling Coil Rate[W]
```

Coil:DX:BF-Empirical

The DX coil model and input is quite different from that for the heating and cooling water coils. The simple water coils use an NTU-effectiveness heat exchanger model. The BF-Empirical DX coil model uses performance information at rated conditions along with curve fits for variations in total capacity, energy input ratio and part load fraction to determine performance at part-load conditions. Sensible/latent capacity splits are determined by the rated sensible heat ratio (SHR) and the apparatus dew point/bypass factor (ADP/BF) approach. This approach is analogous to the NTU-effectiveness calculations used for sensible-only heat exchanger calculations, extended to a cooling and dehumidifying coil.

The BF-Empirical DX coil input requires an availability schedule, the rated total cooling capacity, the rated SHR, the rated COP, and the rated air flow volume rate. The latter 4 inputs determine the coil performance at the rating point (outside drybulb 35 C, entering drybulb 26.7 C, entering wetbulb 19.4C). The rated air flow volume should be between .00004699 m3/s and .00006041 m3/s per watt of rated total cooling capacity.

5 curves are required.

1) The total cooling capacity modifier curve (function of temperature) is a biquadratic curve with two independent variables: wetbulb temperature of the air entering the cooling coil, and drybulb temperature of the air entering the air-cooled condenser. The output of this curve is multiplied by the rated total cooling capacity to give the total cooling capacity at specific

temperature operating conditions (i.e., at temperatures different from the rating point temperatures).

2) The total cooling capacity modifier curve (function of flow fraction) is a quadratic curve with the independent variable being the ratio of the actual air flow rate across the cooling coil to the rated air flow rate (i.e., fraction of full load flow). The output of this curve is multiplied by the rated total cooling capacity and the total cooling capacity modifier curve (function of temperature) to give the total cooling capacity at the specific temperature and air flow conditions at which the coil is operating.

3) The energy input ratio (EIR) modifier curve (function of temperature) is a biquadratic curve with two independent variables: wetbulb temperature of the air entering the cooling coil, and drybulb temperature of the air entering the air-cooled condenser. The output of this curve is multiplied by the rated EIR (inverse of the rated COP) to give the EIR at specific temperature operating conditions (i.e., at temperatures different from the rating point temperatures).

4) The energy input ratio (EIR) modifier curve (function of flow fraction) is a quadratic curve with the independent variable being the ratio of the actual air flow rate across the cooling coil to the rated air flow rate (i.e., fraction of full load flow). The output of this curve is multiplied by the rated EIR (inverse of the rated COP) and the EIR modifier curve (function of temperature) to give the EIR at the specific temperature and air flow conditions at which the coil is operating.

5) The part load fraction correlation (function of part load ratio) is a quadratic curve with the independent variable being part load ratio (sensible cooling load / steady-state sensible cooling capacity). The output of this curve is used in combination with the rated EIR and EIR modifier curves to give the "effective" EIR for a given simulation time step. The part load fraction correlation accounts for efficiency losses due to compressor cycling.

The curves are simply specified by name. Curve inputs are described in the curve manager section of this document (see Group – Performance Curves).

The final input item for the BF-Empirical DX coil is the supply air fan operation mode. Either the supply air fan runs continuously while the DX coil cycles on/off, or the fan and coil cycle on/off together.

Field: DX Coil Unit Name

A unique user assigned name for an instance of a DX coil unit. Any reference to this DX coil unit by another object will use this name.

Field: Availability Schedule

The name of the schedule (ref: Schedule) that denotes whether the DX coil unit can run during a given hour. A schedule value greater than 0 (usually 1 is used) indicates that the unit can be on during the hour. A value less than or equal to 0 (usually 0 is used) denotes that the unit must be off for the hour.

Field: Rated Total Cooling Capacity (gross)

The total, full load cooling capacity (sensible plus latent) in watts of the DX coil unit at rated conditions (outside drybulb 35 C, entering drybulb 26.7 C, entering wetbulb 19.4 C, and a cooling coil air flow rate defined by field "rated air flow volume" below). Capacity should be "gross" (i.e., supply air fan heat is NOT included).

Field: Rated SHR

The sensible heat ratio (sensible capacity divided by total cooling capacity) of the DX coil unit at rated conditions (outside drybulb 35 C, entering drybulb 26.7 C, entering wetbulb 19.4 C, and a cooling coil air flow rate defined by field "rated air flow volume" below). Both the sensible and total capacities used to define the Rated SHR should be "gross" (i.e., supply air fan heat is NOT included).

Field: Rated COP

The coefficient of performance (cooling power output in watts divided by electrical power input in watts) of the DX coil unit at rated conditions (outside drybulb 35 C, entering drybulb 26.7 C, entering wetbulb 19.4 C, and a cooling coil air flow rate defined by field "rated air flow volume" below). The input power includes power for the compressor(s) and condenser fan(s) but does not include the power consumption of the supply air fan. The cooling power output is the valued entered above in the field "Rated Total Cooling Capacity (gross)".

Field: Rated Air Volume Flow Rate

The volume air flow rate, in m^3 per second, across the DX cooling coil at rated conditions. The rated air volume flow rate should be between 0.00004699 m^3/s and 0.00006041 m^3/s per watt of rated total cooling capacity. The rated total cooling capacity, rated SHR and rated COP should be performance information for the unit with outside drybulb temperature of 35C, air entering the cooling coil at 26.7C drybulb/19.4C wetbulb, and the rated air volume flow rate defined here.

Field: Coil Air Inlet Node

The name of the HVAC system node from which the DX coil unit draws its inlet air.

Field: Coil Air Outlet Node

The name of the HVAC system node to which the DX coil unit sends its outlet air.

Field: Total Cooling Capacity Modifier Curve (function of temperature)

The name of a biquadratic performance curve (ref: Performance Curve) that parameterizes the variation of the total cooling capacity as a function of the wetbulb temperature of the air entering the cooling coil, and the drybulb temperature of the air entering the air-cooled condenser (usually just the outside air temperature, but could be modified for roof-mounted condensers). The output of this curve is multiplied by the rated total cooling capacity to give the total cooling capacity at specific temperature operating conditions (i.e., at temperatures different from the rating point temperatures). The curve is normalized to have the value of 1.0 at the rating point.

Field: Total Cooling Capacity Modifier Curve (function of flow fraction)

The name of a quadratic performance curve (ref: Performance Curve) that parameterizes the variation of total cooling capacity as a function of the ratio of actual air flow rate across the cooling coil to the rated air flow rate (i.e., fraction of full load flow). The output of this curve is multiplied by the rated total cooling capacity and the total cooling capacity modifier curve (function of temperature) to give the total cooling capacity at the specific temperature and air flow conditions at which the coil is operating. The curve is normalized to have the value of 1.0 when the actual air flow rate equals the rated air flow rate.

Field: Energy Input Ratio Modifier Curve (function of temperature)

The name of a biquadratic performance curve (ref: Performance Curve) that parameterizes the variation of the energy input ratio (EIR) as a function of the wetbulb temperature of the air entering the cooling coil and the drybulb temperature of the air entering the air-cooled condenser (usually just the outside air temperature). The EIR is the inverse of the COP. The output of this curve is multiplied by the rated EIR (inverse of rated COP) to give the EIR at specific temperature operating conditions (i.e., at temperatures different from the rating point temperatures). The curve is normalized to a value of 1.0 at the rating point.

Field: Energy Input Ratio Modifier Curve (function of flow fraction)

The name of a quadratic performance curve (Ref: Performance Curve) that parameterizes the variation of the energy input ratio (EIR) as a function of the ratio of actual air flow rate across the

cooling coil to the rated air flow rate (i.e., fraction of full load flow). The EIR is the inverse of the COP. The output of this curve is multiplied by the rated EIR and the EIR modifier curve (function of temperature) to give the EIR at the specific temperature and air flow conditions at which the coil is operating. This curve is normalized to a value of 1.0 when the actual air flow rate equals the rated air flow rate.

Field: Part Load Fraction Correlation (function of part load ratio)

The name of a quadratic performance curve (Ref: Performance Curve) that parameterizes the variation of electrical power input to the DX coil unit as a function of the part load ratio (PLR, sensible cooling load/steady-state sensible cooling capacity). The product of the rated EIR and EIR modifier curves is divided by the output of this curve to give the "effective" EIR for a given simulation time step. The part load fraction correlation accounts for efficiency losses due to compressor cycling. The curve is normalized to a value of 1.0 when the part load ratio equals 1.0 (i.e., the compressor(s) run continuously for the simulation time step).

Field: Operation Mode

This input field has two choices: CycFanCycComp or ContFanCycComp. The first choice stands for "cycling fan cycling compressor". This means that the unit unloads by cycling both the fan and compressor; that is, both the supply fan and the DX coil unit compressor cycle on and off together to meet the load. The second choice stands for "continuous fan cycling compressor". The supply fan runs continuously while the DX coil unit compressor cycles.

Below is the input data dictionary description of the BF-Empirical DX coil.

```
COIL:DX:BF-Empirical,
  A1 , \field Coil Name
       \type alpha
  A2 , \field Availability Schedule
       \type object-list
       \object-list ScheduleNames
  N1 , \field rated total cooling capacity (gross)
       \type real
       \units W
       \minimum> 0.0
       \note gross capacity excluding supply air fan heat
       \note rating point outside drybulb 35 C
       \note rating point entering drybulb 26.7 C
       \note rating point entering wetbulb 19.4 C
  N2 , \field rated SHR
       \type real
       \minimum 0.5
       \maximum 1.0
       \note rated sensible heat ratio (gross sensible capacity/gross total capacity)
       \note sensible and total capacities do not include supply fan heat
  N3 , \field rated COP
       \type real
       \minimum> 0.0
       \note does not include supply fan heat or electrical energy input
  N4 , \field rated air volume flow rate
       \type real
       \units m3/s
       \minimum> 0.0
       \note volume flow rate corresponding to rated total capacity and rated SHR
       \note should be between 0.00004699 m3/s and .00006041 m3/s per watt of rated total cooling capacity
  A3 , \field Coil_Air_Inlet_Node
       \type alpha
  A4 , \field Coil_Air_Outlet_Node
       \type alpha
```

```
  A5 , \field total cooling capacity modifier curve (function of temperature)
       \type object-list
       \object-list BiquadraticCurves
       \note curve = a + b*wb + c*wb**2 + d*edb + e*edb**2 + f*wb*edb
       \note wb = entering wetbulb temperature (C)
       \note edb = drybulb temperature seen by the condenser (C)
  A6 , \field total cooling capacity modifier curve (function of flow fraction)
       \type object-list
       \object-list QuadraticCurves
       \note curve = a + b*ff + c*ff**2
       \note ff = fraction of the full load flow
  A7 , \field energy input ratio modifier curve (function of temperature)
       \type object-list
       \object-list BiquadraticCurves
       \note curve = a + b*wb + c*wb**2 + d*edb + e*edb**2 + f*wb*edb
       \note wb = entering wetbulb temperature (C)
       \note edb = drybulb temperature seen by the condenser (C)
  A8 , \field energy input ratio modifier curve (function of flow fraction)
       \type object-list
       \object-list QuadraticCurves
       \note curve = a + b*ff + c*ff**2
       \note ff = fraction of the full load flow
  A9 , \field part load fraction correlation (function of part load ratio)
       \type object-list
       \object-list QuadraticCurves
       \note curve = a + b*PLR * c*PLR**2
       \note PLR = part load ratio (cooling load/steady-state capacity)
  A10; \field supply air fan operation mode
        \type choice
        \key CycFanCycComp
        \key ContFanCycComp
```

Following is an example input for a BF-Empirical DX coil.

```
COIL:DX:BF-Empirical,
       Zone1WindACDXCoil,        ! name
       FanAndCoilAvailSched,     ! coil on/off schedule
       10548,      ! rated total cooling capacity (3 tons)
       0.75,       ! rated sensible heat ratio
       3.0,        ! rated COP
       0.637,      ! rated air flow rate (m3/s)
       Zone1WindACFanOutletNode, ! coil air inlet mode
       Zone1WindACAirOutletNode, ! coil air outlet node
       WindACCoolCapFT,          ! cooling cap modifier curve (temperature)
       WindACCoolCapFFF,         ! cooling cap modifier curve (flow fraction)
       WindACEIRFT,              ! energy input ratio modifier curve (temperature)
       WindACEIRFFF,             ! energy input ratio modifier curve (flow fraction)
       WindACPLFFPLR,            ! part load factor modifier curve (part load ratio)
       ContFanCycComp;           ! supply air fan operation mode
```

DX Coil Outputs

```
HVAC,Average,DX Coil Total Cooling Rate[W]
HVAC,Sum,DX Coil Total Cooling Energy[J]
HVAC,Average,DX Coil Sensible Cooling Rate[W]
HVAC,Sum,DX Coil Sensible Cooling Energy[J]
HVAC,Average,DX Coil Latent Cooling Rate[W]
HVAC,Sum,DX Coil Latent Cooling Energy[J]
HVAC,Average,DX Coil Electric Power[W]
HVAC,Sum,DX Coil Electric Consumption[J]
Zone,Meter,CoolingCoils:EnergyTransfer [J]
Zone,Meter,CoolingCoils:Electricity [J]
```

Field: DX Coil Total Cooling Rate[W]

This field is the total (sensible and latent) cooling rate output of the DX Coil in Watts. This is determined by the inlet and outlet conditions and the air mass flow rate through the coil.

Field: DX Coil Total Cooling Energy[J]

This is the total (sensible plus latent) cooling output of the DX coil inJoules over the time step being reported. This is determined by the inlet & outlet conditions and the air mass flow rate through the coil.

Field: DX Coil Sensible Cooling Rate[W]

This output is the moist air sensible cooling rate output of the DX Coil in Watts. This is determined by the inlet and outlet conditions and the air mass flow rate through the coil.

Field: DX Coil Sensible Cooling Energy[J]

This is the moist air sensible cooling output of the DX Coil in Joules for the time step being reported. This is determined by the inlet and outlet conditions and the air mass flow rate through the coil.

Field: DX Coil Latent Cooling Rate[W]

This is the latent cooling rate output of the DX Coil in Watts. This is determined by the inlet and outlet conditions and the air mass flow rate through the coil.

Field: DX Coil Latent Cooling Energy[J]

This is the latent cooling output of the DX Coil in Joules for the time step being reported. This is determined by the inlet and outlet conditions and the air mass flow rate through the coil.

Field: DX Coil Electric Power[W]

This output is the electricity consumption rate of the DX coil compressor in Watts.

Field: DX Coil Electric Consumption[J]

This is the electricity consumption of the DX coil compressor in Joules for the time step being reported.

Field: CoolingCoils:EnergyTransfer [J]

The DX coil total cooling energy contributes to this meter. The output of this meter is the total cooling energy output in Joules (over the report time step) of all the cooling coils in the HVAC systems in the simulation..

Field: CoolingCoils:Electricity [J]

The DX coil electric consumption contributes to this meter. The output of this meter is the electric energy consumption in Joules (for the report time step) of all the cooling coils in the HVAC systems in the simulation.

Group – Fans

A FAN may be defined either in the air loop or as a zone equipment component. The data that is common to the fan types shown below include an identifying name, an availability schedule, a total efficiency rating, a rated pressure drop, and inlet and outlet node names. In the case of a variable volume fan, additional input includes parameters for modeling fan performance over a range of speeds. See the engineering documentation for the variable speed fan for a further description of

what these coefficients represent. Suggested values for different variable volume systems are shown in the following table.

Table 5. Fan Coefficient Values

Type of Fan	Fan Coeff. 1	Fan Coeff. 2	Fan Coeff. 3	Fan Coeff. 4	Fan Coeff. 5
Inlet Vane Dampers	0.35071223	0.30850535	-0.54137364	0.87198823	0.000
Discharge Dampers	0.37073425	0.97250253	-0.34240761	0.000	0.000
Var. Speed Motor	0.0015302446	0.0052080574	1.1086242	-0.11635563	0.000

Fan:Simple:Const Volume

Field: Fan Name

A unique user assigned name for an instance of a Fan:Simple:Const Volume. Any reference to this fan by another object will use this name.

Field: Available Schedule

The name of the schedule (ref: Schedule) that denotes whether the fan can run during a given hour. A schedule value greater than 0 (usually 1 is used) indicates that the fan can be on during the hour. A value less than or equal to 0 (usually 0 is used) denotes that the fan must be off for the hour.

Field: Fan Total Efficiency

The ratio of the power delivered to the fluid to the electrical input power. It is the product of the motor efficiency and the fan efficiency. The motor efficiency is the power delivered to the shaft divided by the electrical power input to the motor. The fan efficiency is power delivered to the fluid (air) divided by the shaft power. The power delivered to the fluid is the mass flow rate of the air multiplied by the pressure rise divided by the air density. Must be between 0 and 1.

Field: Delta Pressure

The pressure rise in Pascals at full flow and standard (sea level) conditions (21°C and 101325 Pa).

Field: Max Flow Rate

The full load air volumetric flow rate (m^3/sec) at standard temperature and pressure (21° C and 101325 Pa).

Field: Motor Efficiency

The shaft power divided by the electrical power consumed. Must be between 0 and 1.

Field: Motor In Airstream Fraction

The fraction of the motor heat that is added to the air stream. A value of 0 means that the motor is completely outside the air stream. A value of 1 means that all of the motor heat loss will go into the air stream and act to cause a temperature rise. Must be between 0 and 1.

Field: Fan_Inlet_Node

The name of the HVAC system node which supplies the inlet conditions to the fan.

Field: Fan_Outlet_Node

The name of the HVAC system node to which the fan sends its outlet air.

```
FAN:SIMPLE:ConstVolume,
  A1 , \field Fan Name
  A2 , \field Available Schedule
       \type object-list
       \object-list ScheduleNames
  N1 , \field Fan Total Efficiency
       \type real
       \minimum 0.0
       \maximum 1.0
  N2 , \field Delta Pressure
       \units Pa
  N3 , \field Max Flow Rate
       \units m3/sec
  N4 , \field Motor Efficiency
       \type real
       \minimum 0.0
       \maximum 1.0
  N5 , \field Motor In Airstream Fraction
       \ note 0. means fan motor outside air stream, 1.0 means motor in air stream
       \type real
       \minimum 0.0
       \maximum 1.0
  A3 , \field Fan_Inlet_Node
  A4 ; \field Fan_Outlet_Node
```

Simple Constant Volume Fan Outputs

```
HVAC,Average,Fan Power[W]
HVAC,Average,Fan Delta Temp[C]
HVAC,Sum,Fan Energy[J]
```

Fan:Simple:Variable Volume

Field: Fan Name

A unique user assigned name for an instance of a Fan:Simple:Variable Volume. Any reference to this fan by another object will use this name.

Field: Available Schedule

The name of the schedule (ref: Schedule) that denotes whether the fan can run during a given hour. A schedule value greater than 0 (usually 1 is used) indicates that the fan can be on during the hour. A value less than or equal to 0 (usually 0 is used) denotes that the fan must be off for the hour.

Field: Fan Total Efficiency

The ratio of the power delivered to the fluid to the electrical input power at maximum flow. It is the product of the motor efficiency and the fan efficiency. The motor efficiency is the power delivered to the shaft divided by the electrical power input to the motor. The fan efficiency is power delivered to the fluid (air) divided by the shaft power. The power delivered to the fluid is the mass flow rate of the air multiplied by the pressure rise divided by the air density. Must be between 0 and 1.

Field: Delta Pressure

The pressure rise in Pascals at full flow and standard (sea level) conditions (21° C and 101325 Pa).

Field: Max Flow Rate

The full load air volumetric flow rate (m^3/sec) at standard temperature and pressure (21° C and 101325 Pa).

Field: Min Flow Rate

The minimum air volumetric flow rate (m^3/sec) for the fan at standard temperature and pressure (21^oC and 101325 Pa).

Field: Motor Efficiency

The shaft power divided by the electrical power consumed. Must be between 0 and 1.

Field: Motor In Airstream Fraction

The fraction of the motor heat that is added to the air stream. A value of 0 means that the motor is completely outside the air stream. A value of 1 means that all of the motor heat loss will go into the air stream and act to cause a temperature rise. Must be between 0 and 1.

Field: FanCoefficient 1

The constant coefficient (C_1) in a fourth order polynomial curve giving the fraction of full load power (PLF) as a function of flow fraction (FF). Flow fraction is the air mass flow rate divided by the maximum air mass flow rate. The curve is:

$$PLF = C_1 + C_2 \cdot FF + C_3 \cdot FF^{2} + C_4 \cdot FF^{3} + C_5 \cdot FF^{4}$$

Field: FanCoefficient 2

The linear coefficient (C_2) in a fourth order polynomial curve giving the fraction of full load power (PLF) as a function of flow fraction (FF). Flow fraction is the air mass flow rate divided by the maximum air mass flow rate. The curve is:

$$PLF = C_1 + C_2 \cdot FF + C_3 \cdot FF^{2} + C_4 \cdot FF^{3} + C_5 \cdot FF^{4}$$

Field: FanCoefficient 3

The quadratic coefficient (C_3) in a fourth order polynomial curve giving the fraction of full load power (PLF) as a function of flow fraction (FF). Flow fraction is the air mass flow rate divided by the maximum air mass flow rate. The curve is:

$$PLF = C_1 + C_2 \cdot FF + C_3 \cdot FF^{2} + C_4 \cdot FF^{3} + C_5 \cdot FF^{4}$$

Field: FanCoefficient 4

The cubic coefficient (C_1) in a fourth order polynomial curve giving the fraction of full load power (PLF) as a function of flow fraction (FF). Flow fraction is the air mass flow rate divided by the maximum air mass flow rate. The curve is:

$$PLF = C_1 + C_2 \cdot FF + C_3 \cdot FF^{2} + C_4 \cdot FF^{3} + C_5 \cdot FF^{4}$$

Field: FanCoefficient 5

The coefficient C_5 in a fourth order polynomial curve giving the fraction of full load power (PLF) as a function of flow fraction (FF). Flow fraction is the air mass flow rate divided by the maximum air mass flow rate. The curve is:

$$PLF = C_1 + C_2 \cdot FF + C_3 \cdot FF^{2} + C_4 \cdot FF^{3} + C_5 \cdot FF^{4}$$

Field: Fan_Inlet_Node

The name of the HVAC system node which supplies the inlet conditions to the fan.

Field: Fan_Outlet_Node

The name of the HVAC system node to which the fan sends its outlet air.

```
FAN:SIMPLE:VariableVolume,
  A1 , \field Fan Name
  A2 , \field Available Schedule
       \type object-list
       \object-list ScheduleNames
  N1 , \field Fan Total Efficiency
       \type real
       \minimum 0.0
       \maximum 1.0
  N2 , \field Delta Pressure
       \units Pa
  N3 , \field Max Flow Rate
       \units m3/sec
  N4 , \field Min Flow Rate
       \units m3/sec
  N5 , \field Motor Efficiency
       \type real
       \minimum 0.0
       \maximum 1.0
  N6 , \field Motor In Airstream Fraction
       \ note 0. means fan motor outside air stream, 1.0 means motor in air stream
       \type real
       \minimum 0.0
       \maximum 1.0
  N7 , \field FanCoefficient 1
  N8 , \field FanCoefficient 2
  N9 , \field FanCoefficient 3
  N10, \field FanCoefficient 4
  N11, \field FanCoefficient 5
  A3 , \field Fan_Inlet_Node
  A4 ; \field Fan_Outlet_Node
```

Simple Variable Volume Fan Outputs

```
HVAC,Average,Fan Power[W]
HVAC,Average,Fan Delta Temp[C]
HVAC,Sum,Fan Energy[J]
```

Zone Exhaust Fan

Field: Exhaust Fan Name

A unique user assigned name for an instance of a Zone Exhaust Fan. Any reference to this fan by another object will use this name.

Field: Available Schedule

The name of the schedule (ref: Schedule) that denotes whether the fan can run during a given hour. A schedule value greater than 0 (usually 1 is used) indicates that the fan can be on during the hour. A value less than or equal to 0 (usually 0 is used) denotes that the fan must be off for the hour

Field: Fan Total Efficiency

The ratio of the power delivered to the fluid to the electrical input power at maximum flow. It is the product of the motor efficiency and the fan efficiency. The motor efficiency is the power delivered to the shaft divided by the electrical power input to the motor. The fan efficiency is power delivered to the fluid (air) divided by the shaft power. The power delivered to the fluid is the mass flow rate of the air multiplied by the pressure rise divided by the air density. Must be between 0 and 1.

Field: Delta Pressure

The pressure rise in Pascals at full flow and standard (sea level) conditions (21°C and 101325 Pa).

Field: Max Flow Rate

The full load air volumetric flow rate (m^3/sec) at standard temperature and pressure (21° C and 101325 Pa).

Field: Fan_Inlet_Node

The name of the HVAC system node which supplies the inlet conditions to the fan.

Field: Fan_Outlet_Node

The name of the HVAC system node to which the fan sends its outlet air.

```
ZONE EXHAUST FAN,
  A1 , \field Exhaust Fan Name
  A2 , \field Available Schedule
       \type object-list
       \object-list ScheduleNames
  N1 , \field Fan Total Efficiency
       \type real
       \minimum 0.0
       \maximum 1.0
  N2 , \field Delta Pressure
       \units Pa
  N3 , \field Max Flow Rate
       \units m3/sec
  A3 , \field Fan_Inlet_Node
  A4 ; \field Fan_Outlet_Node
```

Examples of these statements in an IDF are:

```
FAN:SIMPLE:ConstVolume,
      Supply Fan 1,  !Fan Name
      FanAndCoilAvailSched,        !Fan Schedule
      0.7,           !Fan Efficiency
      600.0,         !Delta Pressure [N/M^2]
      1.3,           !Max Vol Flow Rate  [m^3/Sec]
      0.9,           !motor efficiency
      1.0,           !motor in air stream fraction
      Air Loop Inlet Node, Cooling Coil Air Inlet Node;          !Inlet Node, Outlet Node
```

```
FAN:SIMPLE:VariableVolume,
      Var Vol Supply Fan 1,  !Fan Name
      FanAndCoilAvailSched,     !Fan Schedule
      0.7,           !Fan Efficiency
      600.0,         !Delta Pressure [N/M^2]
      1.3,           !Max Vol Flow Rate  [m^3/Sec]
      0.20,          !Min Vol Flow Rate  [m^3/Sec]
      0.9,           !motor efficiency
      1.0,           !motor in air stream fraction
      0.35071223,    !Fan Coeff 1 This set of Coeff's is for Inlet Vane Dampers
      0.30850535,    !Fan Coeff 2
     -0.54137364,    !Fan Coeff 3
      0.87198823,    !Fan Coeff 4
      0.000,         !Fan Coeff 5
      Air Loop Inlet Node, Cooling Coil Air Inlet Node;          !Inlet Node, Outlet Node
```

```
ZONE EXHAUST FAN, Zone 2 Exhaust Fan,
        FanAndCoilAvailSched,
        0.6,
        125.,
        0.1,
        Zone 2 Exhaust Node, Zone 2 Exhaust Fan Outlet Node;
```

Zone Exhaust Fan Outputs

```
HVAC,Average,Fan Power[W]
HVAC,Average,Fan Delta Temp[C]
HVAC,Sum,Fan Energy[J]
```

Group – Humidifiers

Humidifier:Steam:Electrical

The electrical steam humidifier is a component that represents an electrically heated, self contained steam humidifier. The component uses electrical energy to convert ordinary tap water to steam which it then injects into the supply air stream by means of a blower fan. The actual unit might be an electrode-type humidifier or a resistance-type humidifier.

Field: Name of humidifier unit

A unique user assigned name for a particular humidifier unit. Any reference to this unit by another object will use this name.

Field: Unit availability schedule

The name of the schedule (ref: Schedule) that denotes whether the unit can run during a given hour. A schedule value greater than 0 (usually 1 is used) indicates that the unit can be on during the hour. A value less than or equal to 0 (usually 0 is used) denotes that the unit must be off for the hour.

Field: Rated capacity

The nominal full output water addition rate of the unit in kilograms of steam per second.

Field: Rated power

The nominal full output power consumption of the unit in watts, exclusive of the blower fan power consumption and any standby power.

Field: Rated fan power

The nominal full output power consumption of the blower fan in watts.

Field: Standby power

The standby power consumption in watts. This amount of power will be consumed whenever the unit is available (as defined by the availability schedule)..

Field: Air inlet node

The name of the HVAC system node from which the unit draws inlet air.

Field: Air outlet node

The name of the HVAC system node to which the unit sends its outlet air

The full IDD specification follows:

```
HUMIDIFIER:STEAM:ELECTRICAL,
  A1, \field Name
  A2, \field Available Schedule
       \type object-list
       \object-list ScheduleNames
  N1, \field rated capacity
      \type real
      \units kg/s
      \minimum 0.0
  N2, \field rated power
      \type real
      \units watts
      \minimum 0.0
  N3, \field rated fan power
      \type real
      \units watts
      \minimum 0.0
  N4, \field Standby power
      \type real
      \units watts
      \minimum 0.0
  A3, \field air inlet node
      \type alpha
  A4; \field air outlet node
      \type alpha
```

An IDF example:

```
HUMIDIFIER:STEAM:ELECTRICAL,
      Humidifier 1,          ! name
      FanAndCoilAvailSched,  ! availability schedule
      .00379,                ! nominal capacity in kg/s = 30 lb/hr
      10200.,                ! rated power in watts
      27.,                   ! fan power in watts
      2.,                    ! standby power
      Cooling Coil Air Outlet Node, ! air inlet node
      Air Loop Outlet Node;         ! air outlet node
```

Humidfier:Steam:Electrical Outputs

```
HVAC,Average,Humidifier Water Consumption Rate[m3/s]
HVAC,Sum,Humidifier Water Consumption[m3]
HVAC,Average,Humidifier Electric Power[W]
HVAC,Sum,Humidifier Electric Consumption[J]
Zone,Meter,Humidifier:Water [m3]
Zone,Meter,Humidifier:Electricity [J]
```

Field: Humidifier Water Consumption Rate[m3/s]

This field reports the water consumption rate of the steam humidifier in cubic meters of water per second.

Field: Humidifier Water Consumption[m3]

This ouput is the cubic meters of water consumed by the steam humidifier over the timestep being reported.

Field: Humidifier Electric Power[W]

This output is the electricity consumption rate in Watts of the steam humidifier.

Field: Humidifier Electric Consumption[J]

This is the electricity consumption in Joules of the steam humidifier over the time step being reported.

Field: Humidifier:Water [m3]

This meter output contains the sum of the water consumed (in cubic neters of water during the report time step) by all the steam humidifiers at the HVAC level in the simulation.

Field Humidifier:Electricity [J]

This meter output contains the sum of the electricity consumed (in Joules during the report time step) by all the steam humidifiers at the HVAC level in the simulation.

Group – Desiccant Dehumidifiers

Desiccant Dehumidifier:Solid

This object models a solid desiccant dehumidifier. The process air stream is the air which is dehumidified. The regen air stream is the air which is heated to regenerate the desiccant. This object determines the process air outlet conditions, the load on the regen heating coil, the electric power consumption for the wheel rotor motor, and the regen air fan mass flow rate. All other heat exchangers are modeled as separate objects connected to the inlet and outlet nodes of the dehumidifier. The solid desiccant dehumidifier is typically used in an OUTSIDE AIR SYSTEM, but can also be specified in any AIR LOOP.

Field: Name

This alpha field contains the identifying name for the desiccant dehumidifier.

Field: Availability Schedule

The name of the schedule (ref: Schedule) that denotes whether the desiccant unit can run during a given hour. A schedule value greater than 0 (usually 1 is used) indicates that the unit can be on during the hour. A value less than or equal to 0 (usually 0 is used) denotes that the unit must be off for the hour.

Field: Process Air inlet node

The name of the node entering the process side of the desiccant wheel.

Field: Process Air outlet node

The name of the node leaving the process side of the desiccant wheel.

Field: Regen Air inlet node

The name of the node entering the regen side of the desiccant wheel after the regen coil.

Field: Regen Fan Inlet Node

Node name for air entering the regen fan, mass flow is set by the desiccant dehumidifier module.

Field: Control Type

Type of setpoint control. Currently only one type is implemented: LEAVING HUMRAT:BYPASS means that the unit is controlled to deliver air at the *Leaving Max Humidity Ratio Setpoint*, using bypass dampers to prevent overdrying.

Field: Leaving Max Humidity Ratio Setpoint

Fixed setpoint for maximum process air leaving humidity ratio. Applicable only when Control Type = LEAVING HUMRAT:BYPASS.

Field: Nominal Process Air Flow Rate

Process air flow rate in m^3/s at nominal conditions

Field: Nominal Process Air Velocity

Process air velocity in m/s at nominal flow

Field: Nominal Regen Air Flow Rate

Regeneration air flow rate in m^3/s.

Field: Nominal Process Air Entering Dry Bulb

Process air entering dry bulb at nominal conditions in degrees C.

Field: Nominal Process Air Entering Humidity Ratio

Process air entering humidity ratio at nominal conditions in kg_{Water}/kg_{Air}.

Field: Nominal water removal capacity

Water removal rate in kg/m^3 from process air stream at nominal conditions per unit of process air flow

Field: Nominal regen energy

Regeneration heat required in J per kg of water removed at nominal conditions.

Field: Rotor power

Power input to wheel rotor motor in W.

Field: Regen coil name

Name of heating coil object for regeneration air.

Field: Regen Fan Name

Name of fan object for regeneration air.

Field: Performance Model

Specifies whether the default performance model or user-specified curves should be used to model the performance. The default model is a generic solid desiccant wheel using performance curves of the form:

```
curve = C1 + C2*edb + C3*edb**2 + C4*ew + C5*ew**2 +
    C6*vel + C7*vel**2 + C8*edb*ew + C9*edb**2*ew**2 +
    C10*edb*vel + C11*edb**2*vel**2 + C12*ew*vel + C13*ew**2*vel**2 +
    C14*ALOG(edb) + C15*ALOG(ew) + C16*ALOG(vel)

    edb = process entering drybulb temperature [C]
    ew  = process entering humidity ratio [kg/kg]
    vel = process air velocity [m/s]
```

If USER CURVES are specified, then performance is calculated as follows:

Leaving Dry Bulb = (Leaving Dry Bulb fTW Curve) * (Leaving Dry Bulb fV Curve)

Leaving Humidity Ratio = (Leaving Humidity Ratio fTW Curve) * (Leaving Humidity Ratio fV Curve)

Regen Energy = (Regen Energy fTW Curve) * (Regen Energy fV Curve)

Regen Velocity = (Regen Velocity fTW Curve) * (Regen Velocity fV Curve)

Field: Leaving Dry Bulb fTW Curve

Leaving dry bulb of process air as a function of entering dry bulb and entering humidity ratio, biquadratic curve.

curve = C1 + C2*edb + C3*edb**2 + C4*ew + C5*ew**2 + C6*edb*ew

edb = process entering drybulb temperature [C]
ew = process entering humidity ratio [kg/kg]

Field: Leaving Dry Bulb fV Curve

Leaving dry bulb of process air as a function of air velocity, quadratic curve.

curve = C1 + C2*v + C3*v**2

v = process air velocity [m/s]

Field: Leaving Humidity Ratio fTW Curve

Leaving humidity ratio of process air as a function of entering dry bulb and entering humidity ratio, biquadratic curve

curve = C1 + C2*edb + C3*edb**2 + C4*ew + C5*ew**2 + C6*edb*ew

edb = process entering drybulb temperature [C]
ew = process entering humidity ratio [kg/kg]

Field: Leaving Humidity Ratio fV Curve

Leaving humidity ratio of process air as a function of process air velocity, quadratic curve.

curve = C1 + C2*v + C3*v**2

v = process air velocity [m/s]

Field: Regen Energy fTW Curve

Regeneration energy [W/kg of water removed] as a function of entering dry bulb and entering humidity ratio, biquadratic curve

curve = C1 + C2*edb + C3*edb**2 + C4*ew + C5*ew**2 + C6*edb*ew

edb = process entering drybulb temperature [C]
ew = process entering humidity ratio [kg/kg]

Field: Regen Energy fV Curve

Regeneration energy [W/kg of water removed] as a function of processair velocity, quadratic curve.

curve = C1 + C2*v + C3*v**2

v = process air velocity [m/s]

Field: Regen Velocity fTW Curve

Regeneration velocity [m/s] as a function of entering dry bulb and entering humidity ratio, biquadratic curve

curve = C1 + C2*edb + C3*edb**2 + C4*ew + C5*ew**2 + C6*edb*ew

edb = process entering drybulb temperature [C]
ew = process entering humidity ratio [kg/kg]

Field: Regen Velocity fV Curve

Regeneration velocity [m/s] as a function of process air velocity, quadratic curve.

curve = C1 + C2*v + C3*v**2

v = process air velocity [m/s]

Field: Nominal Regen Temperature

Nominal regen temperature upon which the regen energy modifier curve is based

```
DESICCANT DEHUMIDIFIER:SOLID,
      \memo This object models a solid desiccant dehumidifier. The process
      \memo air stream is the air which is dehumidified. The regen air
      \memo stream is the air which is heated to regenerate the desiccant.
      \memo This object determines the process air outlet conditions, the
      \memo load on the regen heating coil, the electric power consumption
      \memo for the wheel rotor motor, and the regen air fan mass flow rate.
      \memo All other heat exchangers are modeled as separate objects connected
      \memo to the inlet and outlet nodes of the dehumidifier. The solid
      \memo desiccant dehumidifier is typically used in an OUTSIDE AIR SYSTEM,
      \memo but can also be specified in any AIR LOOP.
  A1, \field Name
  A2, \field Availability Schedule
      \type object-list
      \object-list ScheduleNames
  A3, \field Process Air Inlet Node
      \note This is the node entering the process side of the desiccant wheel.
      \type alpha
  A4, \field Process Air Outlet Node
      \note This is the node leaving the process side of the desiccant wheel.
      \type alpha
  A5, \field Regen Air Inlet Node
      \note This is the node entering the regen side of the desiccant wheel
      \note after the regen coil.
      \type alpha
  A6, \field Regen Fan Inlet Node
      \note Node for air entering the regen fan, mass flow is set
      \note by the desiccant dehumidifier module.
      \type alpha
  A7, \field Control Type
      \note Type of setpoint control
      \note Currently only one type is implemented:
      \note LEAVING HUMRAT:BYPASS means that the unit is controlled
      \note to deliver air at the Leaving Max Humidity Ratio Setpoint,
      \note using bypass dampers to prevent overdrying.
      \type choice
      \key LEAVING HUMRAT:BYPASS
  N1, \field Leaving Max Humidity Ratio Setpoint
      \note Fixed setpoint for maximum process air leaving humidity ratio
      \note Applicable only when Control Type = LEAVING HUMRAT:BYPASS.
      \type real
```

```
  N2, \field Nominal Process Air Flow Rate
      \note Process air flow rate at nominal conditions
      \type real
      \units m3/s
      \minimum> 0.0
  N3, \field Nominal Process Air Velocity
      \note Process air velocity at nominal flow
      \type real
      \units m/s
      \minimum> 0.0
  N4, \field Nominal Regen Air Flow Rate
      \note Regeneration air flow rate
      \type real
      \units m3/s
      \minimum> 0.0
  N5, \field Nominal Process Air Entering Dry Bulb
      \note Process air entering dry bulb at nominal conditions
      \type real
      \units C
      \minimum -99
      \maximum 99
  N6, \field Nominal Process Air Entering Humidity Ratio
      \note Process air entering humidity ratio at nominal conditions
      \type real
      \units kgWater/kgAir
      \minimum> 0.0
  N7, \field Nominal Water Removal Capacity
      \note Water removal rate from process air stream at nominal conditions per
      \note unit of process air flow
      \type real
      \units kg/m3
      \minimum> 0.0
  N8, \field Nominal Regen Energy
      \note Regeneration heat required per kg of water removed at nominal conditions
      \type real
      \units J/kg
      \minimum> 0.0
  N9, \field Rotor Power
      \note Power input to wheel rotor motor
      \type real
      \units W
      \minimum 0.0
  A8, \field Regen Coil Name
      \note Name of heating coil object for regeneration air
      \type object-list
      \object-list HeatingCoilName
  A9, \field Regen Fan Name
      \note Name of fan object for regeneration air
      !\type object-list
      \object-list FanName
 A10, \field Performance Model
      \note Specifies whether the default performance model or user-specified
      \note curves should be used to model the performance.  The default model
      \note is a generic solid desiccant wheel using performance curves of the form:
      \note curve = C1 + C2*edb + C3*edb**2 + C4*ew + C5*ew**2 + C6*vel + C7*vel**2
      \note + C8*edb*ew + C9*edb**2*ew**2 + C10*edb*vel + C11*edb**2*vel**2
      \note + C12*ew*vel + C13*ew**2*vel**2 + C14*ALOG(edb) + C15*ALOG(ew) + C16*ALOG(vel)
      \note   edb = process entering drybulb temperature [C]
      \note   ew  = process entering humidity ratio [kg/kg]
      \note   vel = process air velocity [m/s]
      \note If USER CURVES are specified, then performance is calculated as follows:
      \note   Leaving Dry Bulb = (Leaving Dry Bulb fTW Curve) * (Leaving Dry Bulb fV Curve)
      \note   Leaving Humidity Ratio = (Leaving Humidity Ratio fTW Curve)*(Leaving Humidity Ratio fV
Curve)
      \note   Regen Energy = (Regen Energy fTW Curve) * (Regen Energy fV Curve)
      \note   Regen Velocity = (Regen Velocity fTW Curve) * (Regen Velocity fV Curve)
      \type choice
      \key DEFAULT
      \key USER CURVES
```

```
A11, \field Leaving Dry Bulb fTW Curve
     \note Leaving dry bulb of process air as a function of entering dry bulb
     \note and entering humidity ratio, biquadratic curve
     \type object-list
     \object-list BiquadraticCurves
     \note curve = C1 + C2*edb + C3*edb**2 + C4*ew + C5*ew**2 + C6*edb*ew
     \note edb = process entering drybulb temperature [C]
     \note ew  = process entering humidity ratio [kg/kg]
A12, \field Leaving Dry Bulb fV Curve
     \note Leaving dry bulb of process air as a function of air velocity,
     \note quadratic curve.
     \type object-list
     \object-list QuadraticCurves
     \note curve = C1 + C2*v + C3*v**2
     \note v = process air velocity [m/s]
A13, \field Leaving Humidity Ratio fTW Curve
     \note Leaving humidity ratio of process air as a function of entering dry bulb
     \note and entering humidity ratio, biquadratic curve
     \type object-list
     \object-list BiquadraticCurves
     \note curve = C1 + C2*edb + C3*edb**2 + C4*ew + C5*ew**2 + C6*edb*ew
     \note edb = process entering drybulb temperature [C]
     \note ew  = process entering humidity ratio [kg/kg]
A14, \field Leaving Humidity Ratio fV Curve
     \note Leaving humidity ratio of process air as a function of
     \note process air velocity, quadratic curve.
     \type object-list
     \object-list QuadraticCurves
     \note curve = C1 + C2*v + C3*v**2
     \note v = process air velocity [m/s]
A15, \field Regen Energy fTW Curve
     \note Regeneration energy [W/kg of water removed] as a function of
     \note entering dry bulb and entering humidity ratio, biquadratic curve
     \type object-list
     \object-list BiquadraticCurves
     \note curve = C1 + C2*edb + C3*edb**2 + C4*ew + C5*ew**2 + C6*edb*ew
     \note edb = process entering drybulb temperature [C]
     \note ew  = process entering humidity ratio [kg/kg]
A16, \field Regen Energy fV Curve
     \note Regeneration energy [W/kg of water removed] as a function of
     \note processair velocity, quadratic curve.
     \type object-list
     \object-list QuadraticCurves
     \note curve = C1 + C2*v + C3*v**2
     \note v = process air velocity [m/s]
A17, \field Regen Velocity fTW Curve
     \note Regeneration velocity [m/s] as a function of
     \note entering dry bulb and entering humidity ratio, biquadratic curve
     \type object-list
     \object-list BiquadraticCurves
     \note curve = C1 + C2*edb + C3*edb**2 + C4*ew + C5*ew**2 + C6*edb*ew
     \note edb = process entering drybulb temperature [C]
     \note ew  = process entering humidity ratio [kg/kg]
A18, \field Regen Velocity fV Curve
     \note Regeneration velocity [m/s] as a function of
     \note process air velocity, quadratic curve.
     \type object-list
     \object-list QuadraticCurves
     \note curve = C1 + C2*v + C3*v**2
     \note v = process air velocity [m/s]
N10; \field Nominal Regen Temperature
     \note Nominal regen temperature upon which the
     \note regen energy modifier curve is based
     \type real
     \units C
     \minimum 40
     \maximum 250
     \default 121
```

An example of this statement in an IDF is:

```
DESICCANT DEHUMIDIFIER:SOLID,
    Desiccant 1,             !- Name
    FanAndCoilAvailSched,    !- Availability Schedule
    Mixed Air Node,          !- Process Air Inlet Node
    Desiccant Process Outlet Node,
                             !- Process Air Outlet Node
    Regen Coil Out Node,     !- Regen Air Inlet Node
    Outside Air Inlet Node 2,!- Regen Fan Inlet Node
    LEAVING HUMRAT:BYPASS,   !- Control Type
    0,                       !- Leaving Max Humidity Ratio Setpoint
    0.007,                   !- Nominal Process Air Flow Rate {m3/s}
    1,                       !- Nominal Process Air Velocity {m/s}
    3.556,                   !- Nominal Regen Air Flow Rate {m3/s}
    1,                       !- Nominal Process Air Entering Dry Bulb {C}
    1,                       !- Nominal Process Air Entering Humidity Ratio {kgWater/kgAir}
    1,                       !- Nominal Water Removal Capacity {kg/m3}
    1,                       !- Nominal Regen Energy {J/kg}
    1,                       !- Rotor Power {W}
    0,                       !- Regen Coil Name
    Desiccant Regen Coil,    !- Regen Fan Name
    Desiccant Regen Fan,     !- Performance Model
    !     DEFAULT,           !- Leaving Dry Bulb fTW Curve
    USER CURVES,             !- Leaving Dry Bulb fV Curve
    Desiccant DryBulb fTW Curve,
                             !- Leaving Humidity Ratio fTW Curve
    Desiccant DryBulb fV Curve,
                             !- Leaving Humidity Ratio fV Curve
    Desiccant HumRat fTW Curve,
                             !- Regen Energy fTW Curve
    Desiccant HumRat fV Curve,
                             !- Regen Energy fV Curve
    Desiccant RegenEnergy fTW Curve,
                             !- Regen Velocity fTW Curve
    Desiccant RegenEnergy fV Curve,
                             !- Regen Velocity fV Curve
    121;                     !- Nominal Regen Temperature {C}
```

Solid Desiccant Dehumidifier

```
HVAC,Sum,Desiccant Dehumidifier Water Removed [kg]
HVAC,Average,Desiccant Dehumidifier Water Removal Rate[kg/s]
HVAC,Average,Desiccant Dehumidifier Part Load Ratio[]
HVAC,Average,Desiccant Dehumidifier Elec Use Rate[W]
HVAC,Sum,Desiccant Dehumidifier Elec Use Energy[J]
HVAC,Average,Desiccant Dehumidifier Specific Regen Energy [W/kg H2O]
HVAC,Average,Desiccant Dehumidifier Regen Energy Rate[W]
HVAC,Sum,Desiccant Dehumidifier Regen Energy[J]
HVAC,Average,Desiccant Dehumidifier Regen Air Velocity[m/s]
HVAC,Average,Desiccant Dehumidifier Regen Air Mass Flow Rate[kg/s]
HVAC,Average,Desiccant Dehumidifier Process Air Mass Flow Rate[kg/s]
```

Group – Air Distribution Units

The systems described in the Air Distribution Units (ADU's) are shown below. These single description ADU's contain the reference to the components and the actual controls in one block of input. The idea is that the control volume is drawn tightly around the controls and loosely around the components. This allows complex interactions to take place between all of the components that respond to the Zone Thermostatic Control output. The coils that are referenced in the ADU's are explained fully in the "Coils" section of this manual.

Dual Duct:Const Volume

The Dual Duct Constant Volume simulation or the typical Multizone is described by this Air Distribution Unit (ADU). Multizone systems condition all the air in a central apparatus and distribute it to the conditioned zones through two parallel ducts. One duct carries cold air and the other warm air, providing air sources for both heating and cooling at all times. In each conditioned zone, a mixing valve responsive to a room thermostat mixes the warm and cold air in proper proportions to satisfy the prevailing heating or cooling load of the space. The Multizone ADU is the specific component that leads to the zone containing the mixer and the mixing damper and then connecting to the zone. The total airflow to each room is kept constant while the proportion of hot air to cold air is adjusted to maintain the temperature in each zone at the desired level.

Field: Name

Unique name for the Multizone ADU.

Field: Availability Schedule

Schedule that this component will operate or is available to operate.

Field: Damper Outlet Node

The outlet node from the ADU to the zone.

Field: Damper Hot Air Inlet Node

The air-inlet node name that connects the hot air splitter to the individual zone ADU.

Field: Damper Cold Air Inlet Node

The air-inlet node name that connects the cold air splitter to the individual zone ADU.

Field: Max Air Flow Rate

The design constant volume flow rate (m^3/sec) specified for that Multizone ADU.

```
DUAL DUCT:CONST VOLUME,
  A1 , \field Name
  A2 , \field Availability Schedule
       \type object-list
       \object-list ScheduleNames
  A3 , \field Damper Outlet Node
  A4 , \field Damper Hot Air Inlet Node
  A5 , \field Damper Cold Air Inlet Node
  N1 ; \field Max Air Flow Rate
       \units m3/sec
```

Dual Duct:VAV

Dual duct variable air volume (DDVAV) systems are used to obtain zone temperature control by mixing the cold and warm air in various volume combinations. The fan is sized for the anticipated maximum coincident hot or cold volume, not the sum of the instantaneous peaks. This system has an advantage of a true single path VAV system, except for warm port leakage. When cold air is modulated for control before mixing, it operates similar to the VAV induction when mixing occurs without hot deck reheat. It is similar to a reheat system when mixing occurs while the hot deck is using the reheat coil. It uses more energy than a true VAV system, but less than a constant volume dual duct system.

Field: Name

Unique name for the Dual Duct VAV Air Distribution Unit (ADU).

Field: Availability Schedule

Schedule that this component will operate or is available to operate.

Field: Damper Outlet Node

The outlet node from the ADU to the zone.

Field: Damper Hot Air Inlet Node

The air-inlet node name that connects the hot air splitter to the individual zone ADU.

Field: Damper Cold Air Inlet Node

The air-inlet node name that connects the cold air splitter to the individual zone ADU.

Field: Max Damper Air Flow Rate

The design maximum volume flow rate (m^3/sec) specified for DDVAV ADU.

Field: Zone Minimum Air Flow Fraction

The minimum flow rate to the zone while the system is operating. The minimum zone fraction is normally specified to meet the minimum ventilation requirement for the occupants.

```
DUAL DUCT:VAV,
  A1 , \field Name
  A2 , \field Availability Schedule
       \type object-list
       \object-list ScheduleNames
  A3 , \field Damper Outlet Node
  A4 , \field Damper Hot Air Inlet Node
  A5 , \field Damper Cold Air Inlet Node
  N1 , \field Max Damper Air Flow Rate
       \units m3/sec
  N2 ; \field Zone Minimum Air Flow Fraction
       \Maximum 1.0
       \Minimum 0.0
       \Default 0.2
```

Single Duct:Const Volume:Reheat

The Single Duct Constant Volume or terminal reheat system is a constant volume reheat system. The systems cooling capabilities are provided by way of cooling coil that supplies cooling to the entire supply air volume. The cooling coil is controlled by a controller setpoint specified for the cooling coil. Zone control is accomplished by heating (reheating) the airflow into each zone as determined by the zone thermostat. Currently the reheat can be supplied by a electric, gas, or hot water coil that tries to meet the zone demand.

Field: Name of System

Unique name for the terminal reheat Air Distribution Unit (ADU).

Field: Availability schedule for System

Schedule that this component will operate or is available to operate.

Field: Damper Outlet Node

The outlet node from the ADU to the zone.

Field: Damper Inlet Node

The air-inlet node name that connects the air splitter to the individual zone ADU.

Field: Maximum air flow rate

The design constant volume flow rate (m^3/sec) specified for the terminal reheat ADU.

Field: Control node

The last several fields for this terminal reheat component describe the type of reheat coil that is being used and how it is controlled. Most of the fields pertain to the hot water coil since the gas and electric coil are much more simplified.

For the hot water reheat coil there is a node on the water side that would control the flow to the coil capacity to allow the coil to meet the zone demand. This control location is the name of the control node for the terminal reheat ADU. For the gas and electric coil this is left blank.

Field: Reheat Component Object

The 3 possible reheat component objects currently available are:

```
COIL:Water:SimpleHeating
COIL:Gas:Heating
COIL:Electric:Heating
```

Field: Name of Reheat Component

Unique coil name being simulated with this ADU. Applicable for all coils.

Field: Max Reheat Water Flow

This field is 0 for gas and electric coils. Set to the maximum design water flow (kg/sec) for the hot water coil

Field: Min Reheat Water Flow

This field is zero for gas and electric coils. Set to the minimum design water flow (kg/sec) for the hot water coil, normally set to be a shut off valve that is set to zero.

Field: Control Offset

The coil is controlled by knowing the zone demand determined by the zone thermostat and setting the outlet conditions to meet this demand. For the electric and gas coils, this is set exactly since the coil model solution can be inverted. With the hot water coil that uses an effectiveness-NTU method, the solution cannot be inverted directly. Therefore, to determine the correct mass flow rate for the hot water the solution is solved for by iteration. The iterative solution uses an interval halving routine and needs a termination criteria that is set with the Control Offset parameter. This control offset is set to a percentage of the zone demand as the criteria, i.e. 0.001 percent. This is set to zero for the gas and electric coil.

```
SINGLE DUCT:CONST VOLUME:REHEAT,
  A1,     \field Name of System
  A2,     \field Availability schedule for VAV System
          \type object-list
          \object-list ScheduleNames
  A3,     \field Damper Outlet Node
  A4,     \field Damper Inlet Node
  N1,     \field Maximum air flow rate
          \units m3/sec
  A5,     \field Control node
  A6,     \field Reheat Component Object
  A7,     \field Name of Reheat Component
  N2,     \field Max Reheat Water Flow
          \units kg/sec
  N3,     \field Min Reheat Water Flow
          \units kg/sec
  N4;     \field Control Offset
```

Single Duct:VAV:Reheat

Variable air volume (VAV) systems control the dry bulb temperature inside a zone by varying the supply air volume instead of the air temperature. VAV systems can be used for interior or perimeter zones with a common fan system, air temperature control, and reheating devices. The VAV concept may vary according to the VAV box locations, air temperature controls and types of heating elements. Heating can usually be provided by use of reheat coils or thermostatic baseboard.

Field: Name of System

Unique name for the VAV Air Distribution Unit (ADU).

Field: Availability schedule for VAV System

Schedule that this component will operate or is available to operate.

Field: Damper Outlet Node

The outlet node from the ADU to the zone.

Field: Damper Inlet Node

The air-inlet node name that connects the air splitter to the individual zone ADU.

Field: Maximum air flow rate

The design maximum volume flow rate (m^3/sec) specified for VAV ADU.

Field: Min air flow

The minimum flow rate (m^3/sec) to the zone while the system is operating. The minimum zone fraction is normally specified to meet the minimum ventilation requirement for the occupants.

Field: Control node

The last several fields for this terminal reheat component describe the type of reheat coil that is being used and how it is controlled. Most of the fields pertain to the hot water coil since the gas and electric coil are much more simplified.

For the hot water reheat coil there is a node on the water side that would control the flow to the coil capacity to allow the coil to meet the zone demand. This control location is the name of the control node for the terminal reheat ADU. For the gas and electric coil this is left blank.

Field: Reheat Component Object

The 3 possible reheat component objects currently available are:

```
COIL:Water:SimpleHeating
COIL:Gas:Heating
COIL:Electric:Heating
```

Field: Name of Reheat Component

Unique coil name being simulated with this ADU. Applicable for all coils.

Field: Max Reheat Water Flow

This field is 0 for gas and electric coils. Set to the maximum design water flow (kg/sec) for the hot water coil

Field: Min Reheat Water Flow

This field is zero for gas and electric coils. Set to the minimum design water flow (kg/sec) for the hot water coil, normally set to be a shut off valve that is set to zero.

Field: Reheat Air Outlet Node

This is the outlet node for the ADU and is then connected to the zone. This is unique for the VAV since there are multiple simulation components in the VAV ADU.

Field: Control Offset

The coil is controlled by knowing the zone demand determined by the zone thermostat and setting the outlet conditions to meet this demand. For the electric and gas coils, this is set exactly since the coil model solution can be inverted. With the hot water coil that uses an effectiveness-NTU method, the solution cannot be inverted directly. Therefore, to determine the correct mass flow rate for the hot water the solution is solved for by iteration. The iterative solution uses an interval halving routine and needs a termination criteria that is set with the Control Offset parameter. This control offset is set to a percentage of the zone demand as the criteria, i.e. 0.001 percent. This is set to zero for the gas and electric coil.

```
SINGLE DUCT:VAV:REHEAT,
  A1,     \field Name of System
  A2,     \field Availability schedule for VAV System
          \type object-list
          \object-list ScheduleNames
  A3,     \field Damper Outlet Node
  A4,     \field Damper Inlet Node
  N1,     \field Maximum air flow rate
          \units m3/sec
  N2,     \field Min air flow
          \note % of Max air flow
  A5,     \field Control node
  A6,     \field Reheat Component Object
  A7,     \field Name of Reheat Component
  N3,     \field Max Reheat Water Flow
          \units kg/sec
  N4,     \field Min Reheat Water Flow
          \units kg/sec
  A8,     \field Reheat Air Outlet Node
  N5;     \field Control Offset
```

Examples of these statements in an IDF are shown below in the order from above.

```
DUAL DUCT:CONST VOLUME,
        Zone1MixDamp,                !Name
        FanAndCoilAvailSched,        !Availability Schedule
        Zone 1 Dual Duct Outlet,     !Damper Outlet Node Number
        Zone 1 Dual Duct Hot Inlet,  !Damper Hot Air Inlet Node Number
        Zone 1 Dual Duct Cold Inlet, !Damper Cold Air Inlet Node Number
        0.47;                        !Max Damper Air Flow Rate M³/Sec
```

```
DUAL DUCT:VAV,
        Zone1MixDamp,                !Name
        FanAndCoilAvailSched,        !Availability Schedule
        Zone 1 Dual Duct Outlet,     !Damper Outlet Node Number
        Zone 1 Dual Duct Hot Inlet,  !Damper Hot Air Inlet Node Number
        Zone 1 Dual Duct Cold Inlet, !Damper Cold Air Inlet Node Number
        0.47,                        !Max Damper Air Flow Rate M³/Sec
        0.3;                         !Zone Minimum Air Fraction
```

```
SINGLE DUCT:CONST VOLUME:REHEAT,
          Reheat Zone 1,                 ! Name of System
          FanAndCoilAvailSched,          ! Availability schedule for System
          Zone 1 Reheat Air Outlet Node, ! Air distribution Unit inlet nodes
          Zone 1 Reheat Air Inlet Node,  ! Air distribution Unit outlet nodes
          0.47,                          ! Maximum air flow rate m^3/s
          Zone 1 Reheat Water Inlet Node,! Control node
          COIL:Water:SimpleHeating,      ! Reheat Component Object
          Reheat Coil Zone 1,            ! Name of Reheat Component
          1.3,                           ! Max Reheat Water Flow {Flow: kg/sec}
          0.0,                           ! Min Reheat Water Flow {Flow: kg/sec}
          0.001;                         ! Control Offset

   COIL:Water:SimpleHeating,
         Reheat Coil Zone 1,             !Name of cooling coil
         FanAndCoilAvailSched,           !Cooling Coil Schedule
         400.0,                          !UA of the Coil
         1.3,                            !Max Water Flow Rate of Coil kg/sec
         Zone 1 Reheat Water Inlet Node, !Coil Water Side Inlet Node
         Zone 1 Reheat Water Outlet Node,!Coil Water Side Outlet Node
         Zone 1 Reheat Air Inlet Node,   !Coil Air Side Inlet Node
         Zone 1 Reheat Air Outlet Node;  !Coil Air Side Outlet Node
```

```
SINGLE DUCT:VAV:REHEAT,
          Zone 1 VAV System,             ! Name of System
          FanAndCoilAvailSched,          ! Availability schedule for VAV System
          Zone 1 Reheat Air Inlet Node,  ! Damper outlet node
          Zone 1 Damper Inlet Node,      ! Damper inlet nodes
          0.47,                          ! Maximum air flow rate m^3/s
          0.3,                           ! Min air flow as % of Max air flow
          Zone 1 Reheat Water Inlet Node,! Control node
          COIL:Water:SimpleHeating,      ! Reheat Component Object
          Reheat Coil Zone 1,            ! Name of Reheat Component
          1.3,                           ! Max Reheat Water Flow {Flow: kg/sec}
          0.0,                           ! Min Reheat Water Flow {Flow: kg/sec}
          Zone 1 Reheat Air Outlet Node, ! Coil Air Outlet Node
          0.001;                         ! Control Offset

COIL:Water:SimpleHeating,
         Reheat Coil Zone 1,             !Name of cooling coil
         FanAndCoilAvailSched,           !Cooling Coil Schedule
         400.0,                          !UA of the Coil
         1.3,                            !Max Water Flow Rate of Coil kg/sec
         Zone 1 Reheat Water Inlet Node, !Coil Water Side Inlet Node
         Zone 1 Reheat Water Outlet Node,!Coil Water Side Outlet Node
         Zone 1 Reheat Air Inlet Node,   !Coil Air Side Inlet Node
         Zone 1 Reheat Air Outlet Node;  !Coil Air Side Outlet Node
```

Single Duct:Series PIU:Reheat

The series powered induction unit is an air system terminal unit that mixes varying amounts of secondary (recirculated) air and primary (conditioned supply) air to produce a fixed flow of air to a zone. The unit contains a small fan that acts to induce the secondary air and a heating coil for heating the mixed secondary and primary air. The fan runs at a constant volume flow rate whenever the unit is on. The fan is downstream of the primary and secondary air inlets. The variable mixing is accomplished by a damper in the unit's primary air supply inlet duct. This damper can move from fully open (100% primary air. 0% secondary air) to a minimum stop that is specified in the input description. At full cooling the damper will be fully open. At minimum cooling and for heating the damper will be at the minimum stop and the secondary air flow will be at its maximum.

The EnergyPlus model of the series PIU terminal unit is composed of three components: a zone mixer, a constant volume fan, and a heating coil (hot water, electric, or gas).

Field: Name of terminal unit

A unique user assigned name for a particular series powered induction terminal unit. Any reference to this unit by another object will use this name.

Field: Unit availability schedule

The name of the schedule (ref: Schedule) that denotes whether the unit can run during a given hour. A schedule value greater than 0 (usually 1 is used) indicates that the unit can be on during the hour. A value less than or equal to 0 (usually 0 is used) denotes that the unit must be off for the hour.

Field: Maximum total air volume flow rate

The maximum volumetric air flow rate through the unit in cubic meters per second. Since this is a constant air volume unit, this is also the design, rated air flow rate of the unit.

Field: Maximum primary air volume flow rate

The maximum volumetric air flow rate of primary air through the unit in cubic meters per second. This is the primary air flow rate at full cooling load when the primary air damper is fully open. Usually this quantity is the same as the total unit flow rate, but it can be less.

Field: Minimum primary air flow fraction

The minimum volumetric air flow rate of primary air through the unit expressed as a fraction of the maximum volumetric air flow rate of primary air. This input can be 0.0.

Field:Terminal unit supply air inlet node

The name of the HVAC system node from which the unit draws its primary or supply air

Field: Terminal unit secondary air inlet node

The name of the HVAC system node from which the unit draws its secondary or recirculated air.

Field: Terminal unit outlet node

The name of the HVAC system node to which the unit sends its outlet air. This should be one of the inlet air nodes of the zone which is being served.

Field: Reheat coil air inlet node

The name of the HVAC system node which is the inlet node of the unit's heating coil. This is also the outlet node of the unit's fan.

Field: Zone Mixer component name

The name of an zone mixer component which composes part of the fan coil unit. Note that some of the input for the mixer will duplicate input fields of the powered induction unit. One of the zone mixer inlet nodes should be the same as the supply air inlet node of the PIU; the other inlet node of the zone mixer should be the same as the secondary air inlet node of the PIU. The outlet node of the zone mixer should be the same as the inlet node of the PIU fan.

Field: Fan component name

The name of a fan component which composes part of the unit. Note that the fan's maximum flow rate should be the same as the maximum air flow rate of the PIU. The fan's inlet node should be the same as the zone mixer's outlet node. The fan's outlet node should be the same as the heating coil's air inlet node.

Field: Reheat coil object

The type of coil in the PIU. The choices are:

COIL:Water:SimpleHeating

COIL:Electric:Heating

COIL:Gas:Heating

In other words the PIU may have a hot water, gas, or electric reheat coil.

Field: Reheat coil name

The name of the heating coil component which composes part of the unit. Note that the heating coil's air inlet node is the same as the fan outlet node and the heating coil's air outlet node is the same as the PIU outlet node.

Field: Maximum reheat water flow

The maximum hot water mass flow rate in kilograms per second through the unit's heating coil. If the heating coil is gas or electric this field should be blank.

Field: Minimum reheat water flow

The minimum hot water mass flow rate in kilograms per second through the unit's heating coil. If the heating coil is gas or electric this field should be blank.

Field: Hot water control node

The name of the HVAC system node which regulates the flow of hot water through the unit. This should be the same node as the water inlet node of the unit's hot water coil. For gas or electric heating coils, this input should be blank.

Field: Control offset

The control tolerance for the unit heating output. The unit is controlled by matching the unit output to the zone demand. For units with water coils, the model must be numerically inverted to obtain a specified output. The control offset is the error tolerance used to terminate the numerical inversion procedure. Basically this is the fraction:

$$|(Q_{PIU,\ out} - Q_{zone\ load})| \ / \ Q_{zone\ load}$$

For gas or electric heating coils, this input should be left blank.

The full IDD specification follows:

```
SINGLE DUCT:SERIES PIU:REHEAT,
  A1,     \field terminal box name
          \type alpha
  A2,     \field unit availability schedule
          \type object-list
          \object-list ScheduleNames
  N1,     \field maximum total air volume flow rate
          \type real
          \units m3/s
  N2,     \field maximum primary air volume flow rate
          \type real
          \units m3/s
  N3,     \field minimum primary air flow fraction
          \type real
```

```
  A3,     \field terminal box supply air inlet node
          \type alpha
  A4,     \field terminal box secondary air inlet node
          \type alpha
  A5,     \field terminal box outlet node
          \type alpha
  A6,     \field Reheat coil air inlet node (fan outlet node)
          \type alpha
  A7,     \field Zone Mixer component name
          \type alpha
  A8,     \field Fan component name
          \type alpha
  A9,     \field Reheat Coil object
          \type choice
          \key COIL:Water:SimpleHeating
          \key COIL:Electric:Heating
          \key COIL:Gas:Heating
  A10,     \field Reheat Coil name
          \type object-list
          \object-list HeatingCoilName
  N4,     \field Max Reheat Water Flow
          \type real
          \units kg/s
  N5,     \field Min Reheat Water Flow
          \type real
          \units kg/s
  A11,    \field reheat water control node
          \type alpha
  N6;     \field Control offset
          \type real
```

An IDF example:

```
    SINGLE DUCT:SERIES PIU:REHEAT,
          Zone 1 SPIU ATU,          ! Name of air terminal unit
          FanAndCoilAvailSched,     ! Availability schedule for series PIU ATU
          0.47,                     ! Total volume flow rate through ATU
          0.47,                     ! Maximum primary air flow rate through terminal unit
          0.3,                      ! Minimum primary air flow rate (fraction of max)
          Zone 1 PIU Pri Air Inlet Node,   ! Air Terminal unit supply air inlet node
          Zone 1 PIU Sec Air Inlet Node,   ! Air Terminal unit secondary air inlet node
          Zone 1 PIU Air Outlet Node,      ! Air Terminal unit outlet node
          Zone 1 Reheat Air Inlet Node,    ! Reheat coil air inlet node (fan outlet node)
          Zone 1 PIU Mixer,                ! Air terminal unit mixer name
          Zone 1 PIU Fan,                  ! Air terminal unit fan name
          COIL:Water:SimpleHeating,        ! type of air terminal unit reheat coil
          Reheat Coil Zone 1,              ! name of air terminal unit reheat coil
          1.3,                             ! Max Reheat Water Flow {Flow: kg/sec}
          0.0,                             ! Min Reheat Water Flow {Flow: kg/sec}
          Zone 1 Reheat Water Inlet Node,  ! Control node
          0.001;                    ! Control Offset
```

Single Duct:Series PIU:Reheat Outputs

```
HVAC,Average,PIU Heating Rate[W]
HVAC,Sum,PIU Heating Energy[J]
HVAC,Average,PIU Sensible Cooling Rate[W]
HVAC,Sum,PIU Sensible Cooling Energy[J]
```

Field: PIU Heating Rate[W]

This field reports the dry air heating addition rate of the series PIU terminal unit to the zone it is serving in Watts. This is determined by outlet and zone air conditions and the mass flow rate through the terminal unit.

Field: PIU Heating Energy[J]

This field reports the dry air heat addition of the series PIU terminal unit to the zone it is serving in Joules over the time step being reported. This is determined by outlet and zone air conditions, the mass flow rate through the terminal unit, and the time step.

Field: PIU Sensible Cooling Rate[W]

This field reports the dry air sensible heat extraction rate of the series PIU terminal unit from the zone it is serving in Watts. This is determined by the outlet and zone conditions and the mass flow rate through the terminal unit.

Field: PIU Sensible Cooling Energy[J]

This field reports the dry air sensible heat extraction of the series PIU terminal unit from the zone it is serving in Joules over the time step being reported. This is determined by outlet and zone air conditions, the mass flow rate through the terminal unit, and the time step.

Single Duct:Parallel PIU:Reheat

The parallel powered induction unit is an air system terminal unit that mixes varying amounts of secondary (recirculated) air and primary (conditioned supply) air to produce a variable total flow of air to a zone. The unit contains a small fan that acts to induce the secondary air and a heating coil for heating the mixed secondary and primary air. The secondary and primary air streams enter the unit in parallel. The fan sits in the secondary air stream and runs only when secondary air is needed. The primary air inlet contains a damper that can move from fully open (maximum primary air) to a minimum stop (minimum primary air).

At full cooling load the primary air damper is fully open and the fan is off. The primary air flow is at maximum and there is little or no secondary air flow. As the cooling load decreases, the primary air damper gradually closes and the secondary air flow remains close to zero. At some point, usually when the primary air flow has reached the minimum, the fan switches on and secondary air is induced. The heating coil will switch on as needed to meet ant heating demand.

The EnergyPlus model of the parallel PIU terminal unit is composed of three components: a constant volume fan, a zone mixer, and a heating coil (hot water, electric, or gas).

Field: Name of terminal unit

A unique user assigned name for a particular parallel powered induction terminal unit. Any reference to this unit by another object will use this name.

Field: Unit availability schedule

The name of the schedule (ref: Schedule) that denotes whether the unit can run during a given hour. A schedule value greater than 0 (usually 1 is used) indicates that the unit can be on during

the hour. A value less than or equal to 0 (usually 0 is used) denotes that the unit must be off for the hour.

Field: Maximum primary air volume flow rate

The maximum volumetric air flow rate of primary air through the unit in cubic meters per second. This is the primary air flow rate at full cooling load when the primary air damper is fully open.

Field: Maximum secondary air volume flow rate

The maximum volumetric air flow rate of primary air through the unit in cubic meters per second. This flow rate can be any amount but is commonly less than the maximum primary air flow rate.

Field: Minimum primary air flow fraction

The minimum volumetric air flow rate of primary air through the unit expressed as a fraction of the maximum volumetric air flow rate of primary air. This input can be 0.0.

Field: Fan on flow fraction

The fraction of the primary air flow at which fan turns on. In the parallel PIU the fan operation is intermittent. If the primary air flow is above this fraction of the maximum, the fan is off. Otherwise it is on.

Field:Terminal unit supply air inlet node

The name of the HVAC system node from which the unit draws its primary or supply air

Field: Terminal unit secondary air inlet node

The name of the HVAC system node from which the unit draws its secondary or recirculated air.

Field: Terminal unit outlet node

The name of the HVAC system node to which the unit sends its outlet air. This should be one of the inlet air nodes of the zone which is being served.

Field: Reheat coil air inlet node

The name of the HVAC system node which is the inlet node of the unit's heating coil. This is also the outlet node of the unit's fan.

Field: Zone Mixer component name

The name of an zone mixer component which composes part of the fan coil unit. Note that some of the input for the mixer will duplicate input fields of the powered induction unit. One of the zone mixer inlet nodes should be the same as the supply air inlet node of the PIU; the other inlet node of the zone mixer should be the same as the air outlet node of the fan. The outlet node of the zone mixer should be the same as the inlet node of the heating coil.

Field: Fan component name

The name of a fan component which composes part of the unit. Note that the fan's maximum flow rate should be the same as the maximum secondary air flow rate of the PIU. The fan's inlet node should be the same as the PIU secondary air inlet node. The fan's outlet node should be the same as one of the zone mixer's inlet nodes.

Field: Reheat coil object

The type of coil in the PIU. The choices are:

COIL:Water:SimpleHeating

COIL:Electric:Heating

COIL:Gas:Heating

In other words the PIU may have a hot water, gas, or electric reheat coil.

Field: Reheat coil name

The name of the heating coil component which composes part of the unit. Note that the heating coil's air inlet node is the same as the zone mixer's outlet node and the heating coil's air outlet node is the same as the PIU outlet node.

Field: Maximum reheat water flow

The maximum hot water mass flow rate in kilograms per second through the unit's heating coil. If the heating coil is gas or electric this field should be blank.

Field: Minimum reheat water flow

The minimum hot water mass flow rate in kilograms per second through the unit's heating coil. If the heating coil is gas or electric this field should be blank.

Field: Hot water control node

The name of the HVAC system node which regulates the flow of hot water through the unit. This should be the same node as the water inlet node of the unit's hot water coil. For gas or electric heating coils, this input should be blank.

Field: Control offset

The control tolerance for the unit heating output. The unit is controlled by matching the unit output to the zone demand. For units with water coils, the model must be numerically inverted to obtain a specified output. The control offset is the error tolerance used to terminate the numerical inversion procedure. Basically this is the fraction:

$$|(Q_{PIU,out} - Q_{zone\ load})| \ / \ Q_{zone\ load}$$

For gas or electric heating coils, this input should be left blank.

The full IDD specification follows:

```
SINGLE DUCT:PARALLEL PIU:REHEAT,
  A1,     \field terminal box name
          \type alpha
  A2,     \field unit availability schedule
          \type object-list
          \object-list ScheduleNames
  N1,     \field maximum primary air volume flow rate
          \type real
          \units m3/s
  N2,     \field maximum secondary air volume flow rate
          \type real
          \units m3/s
  N3,     \field minimum primary air flow fraction
          \type real
  N4,     \field fan on flow fraction
          \type real
          \note the fraction of the promary air flow at which fan turns on
  A3,     \field terminal box supply air inlet node
          \type alpha
  A4,     \field terminal box secondary air inlet node
          \type alpha
  A5,     \field terminal box outlet node
          \type alpha
  A6,     \field Reheat coil air node inlet node
          \type alpha
          \note mixer outlet node
  A7,     \field Zone Mixer component name
          \type alpha
  A8,     \field Fan component name
          \type alpha
  A9,     \field Reheat Coil object
          \type choice
          \key COIL:Water:SimpleHeating
          \key COIL:Electric:Heating
          \key COIL:Gas:Heating
  A10,    \field Reheat Coil name
          \type object-list
          \object-list HeatingCoilName
  N5,     \field Max Reheat Water Flow
          \type real
          \units kg/s
  N6,     \field Min Reheat Water Flow
          \type real
          \units kg/s
  A11,    \field reheat water control node
          \type alpha
  N7;     \field Control offset
          \type real
```

An IDF example:

```
SINGLE DUCT:PARALLEL PIU:REHEAT,
      Zone 3 PPIU ATU,          ! Name of air terminal unit
      FanAndCoilAvailSched,     ! Availability schedule for series PIU ATU
      0.47,                     ! Maximum primary air flow rate through terminal unit
      0.375,                    ! Maximum secondary air flow rate through the terminal unit
      0.1,                      ! Minimum primary air flow rate (fraction of max)
      0.1,                      ! fan on flow fraction
      Zone 3 PIU Pri Air Inlet Node,   ! Air Terminal unit supply air inlet node
      Zone 3 PIU Sec Air Inlet Node,   ! Air Terminal unit secondary air inlet node
      Zone 3 PIU Air Outlet Node,      ! Air Terminal unit outlet node
      Zone 3 Reheat Air Inlet Node,    ! Reheat coil air inlet node (fan outlet node)
      Zone 3 PIU Mixer,                ! Air terminal unit mixer name
      Zone 3 PIU Fan,                  ! Air terminal unit fan name
      COIL:Water:SimpleHeating,        ! type of air terminal unit reheat coil
      Reheat Coil Zone 3,              ! name of air terminal unit reheat coil
      1.3,                             ! Max Reheat Water Flow {Flow: kg/sec}
      0.0,                             ! Min Reheat Water Flow {Flow: kg/sec}
      Zone 3 Reheat Water Inlet Node,  ! Control node
      0.001;                    ! Control Offset
```

Single Duct:Parallel PIU:Reheat Outputs

```
HVAC,Average,PIU Heating Rate[W]
HVAC,Sum,PIU Heating Energy[J]
HVAC,Average,PIU Sensible Cooling Rate[W]
HVAC,Sum,PIU Sensible Cooling Energy[J]
```

Field: PIU Heating Rate[W]

This field reports the dry air heating addition rate of the parallel PIU terminal unit to the zone it is serving in Watts. This is determined by outlet and zone air conditions and the mass flow rate through the terminal unit.

Field: PIU Heating Energy[J]

This field reports the dry air heat addition of the parallel PIU terminal unit to the zone it is serving in Joules over the time step being reported. This is determined by outlet and zone air conditions, the mass flow rate through the terminal unit, and the time step.

Field: PIU Sensible Cooling Rate[W]

This field reports the sensible heat extraction rate of the parallel PIU terminal unit from the zone it is serving in Watts. This is determined by the outlet and zone conditions and the mass flow rate through the terminal unit.

Field: PIU Sensible Cooling Energy[J]

This field reports the dry air sensible heat extraction of the parallel PIU terminal unit from the zone it is serving in Joules over the time step being reported. This is determined by outlet and zone air conditions, the mass flow rate through the terminal unit, and the time step.

Group – Local Convective Units

Purchased Air

The simplest piece of equipment that can be attached to a zone equipment loop is PURCHASED AIR. Typically, purchased air is used on its own to assist a user in sizing an HVAC system for flow rates, coil sizes, etc. In such a case, air loop, plant, and condenser descriptions are not needed.

In this simplified case, only the zone controls, the zone equipment configuration, and the purchased air statements are necessary to provide conditioning to the zone. The PURCHASED AIR statement includes an identifying name, a supply air node number that should match the zone being served, and inlet air conditions for heating and cooling cases. Note that a purchased air object has no maximum or minimum capacity or flow rate. Whatever airflow is needed to meet the zone load will be provided.

Field: Purchased Air Name

A unique user assigned name for each purchased air component. Any other component that needs to use this purchased air component will refer to it by this name.

Field: Zone Supply Air Node Name

The name of the outlet air node of the purchased air object. This should be the same as one of the supply air nodes for the zone the purchased air component is serving.

Field: Heating Supply Air Temp

The constant air temperature (degrees C) of the air used for heating the zone.

Field: Cooling Supply Air Temp

The constant air temperature (degrees C) of the air used for cooling the zone.

Field: Heating Supply Air Humidity Ratio

The constant humidity ratio (kg of water per kg of dry air) of the hot supply air.

Field: Cooling Supply Air Humidity Ratio

The constant humidity ratio (kg of water per kg of dry air) of the hot supply air.

```
PURCHASED AIR,
  A1 , \field Purchased Air Name
  A2 , \field Zone Supply Air Node Name
  N2 , \field Heating Supply Air Temp
       \units C
       \minimum> -100
       \maximum< 100
  N3 , \field Cooling Supply Air Temp
       \units C
       \minimum> -100
       \maximum< 100
  N4 , \field Heating Supply Air Humidity Ratio
       \units kg-H20/kg-air
       \minimum> 0
  N5 ; \field Cooling Supply Air Humidity Ratio
       \units kg-H20/kg-air
       \minimum> 0
```

An example of this statement in an IDF is:

```
PURCHASED AIR, Zone2Air,NODE_2,50,13,0.015,0.010;
```

Purchased Air Outputs

```
HVAC,Sum,Purchased Air Heating Energy[J]
HVAC,Average,Purchased Air Heating Rate[W]
HVAC,Sum,Purchased Air Cooling Energy[J]
HVAC,Average,Purchased Air Cooling Rate[W]
```

Direct Air

Central system air is usually supplied to a zone through a terminal unit such as a single duct VAV reheat box. Sometimes, however, it is desirable to supply central system air directly to a zone without any zone level control or tempering. An example would be a single zone reheat system.

The control zone receives supply air directly from the central system since the supply air temperature has been adjusted to control the temperature in the control zone. The slave zones then have baseboards or reheat coils to allow some temperature adjustment. The Direct Air object creates the capability of supplying central system air directly to a zone. Its input consists of the object name, an availability (on/off) schedule, and a node name. This node is both a zone inlet node and an outlet node of the Zone Splitter.

Field: Direct Air Name

A unique user assigned name for each direct air component. Any other component that needs to use this direct air component will refer to it by this name.

Field: Schedule name for on/off schedule

The name of the schedule (ref: Schedule) that denotes whether the direct air component can run during a given hour. A schedule value greater than 0 (usually 1 is used) indicates that the direct air component can be on during the hour. A value less than or equal to 0 (usually 0 is used) denotes that the direct air component must be off for the hour

Field: Zone Supply Air Node Name

The name of the node to which the direct air component is supplying air. This should be one of the supply air nodes for the zone the direct air component is serving. This node should also be an outlet node of a zone splitter component.

Field: Maximum Air Flow Rate

The design maximum volume flow rate (m^3/sec) specified for Direct Air, Air Distribution Unit (ADU).

The IDD definition is shown below.

```
DIRECT AIR,
   A1, \field Direct Air Name
   A2, \field Schedule name for on/off schedule
       \type object-list
       \object-list ScheduleNames
   A3, \field Zone Supply Air Node Name
   N1; \field Maximum air flow rate
       \units m3/s
       \Minimum 0.0
```

An example input follows.

```
DIRECT AIR,
    Zone1DirectAir,
    FanAndCoilAvailSched,
    Zone 1 Inlet Node,
    0.47;
DIRECT AIR,
    Zone2DirectAir,
    FanAndCoilAvailSched,
    Zone 2 Inlet Node,
    0.36;
DIRECT AIR,
    Zone3DirectAir,
    FanAndCoilAvailSched,
    Zone 3 Inlet Node,
    0.47;
```

Fan Coil Unit: 4 Pipe

The fan coil units are zone equipment units which are assembled from other components. Fan coils contain an outdoor air mixer, a fan, a simple heating coil and a simple cooling coil. These components are described elsewhere in this document. The fan coil input simply requires the names of these four components, which have to be described elsewhere in the input. The input also requires the name of an availability schedule, maximum airflow rate, an outside airflow rate, and maximum and minimum hot and cold water mass flow rates. The unit is connected to the zone inlet and exhaust nodes and the outside air by specifying unit inlet, outlet, outside air and exhaust (relief) air node names. Note that the unit air inlet node should be the same as a zone exhaust node and the unit outlet node should be the same as a zone inlet node. The fan coil unit is connected to a hot water loop (demand side) through its hot water coil and to a chilled water loop (demand side) through its cooling coil.

The unit is controlled to meet the zone (remaining) heating or cooling demand. If there is a heating demand, the cooling coil is off and the hot water flow through the heating coil is throttled to meet the demand. The hot water control node must be specified (same as the hot water coil inlet node) as well as maximum and minimum possible hot water mass flow rates. If there is a cooling demand from the zone, the hot water coil is off and the chilled water flow through the cooling coil is throttled to meet the load. The cooling coil control node must be specified (same as the cooling coil inlet node) and the maximum and minimum chilled water mass flow rates must be given. Finally both heating and cooling require a control offset, which is really the tolerance denoting how closely the fan coil unit will meet the heating or cooling load. The tolerance is always relative to the zone load.

Field: name of fan coil unit

A unique user assigned name for an instance of a Fan Coil unit. Any reference to this Fan Coil unit by another object will use this name.

Field: availability schedule

The name of the schedule (ref: Schedule) that denotes whether the fan coil unit can run during a given hour. A schedule value greater than 0 (usually 1 is used) indicates that the unit can be on during the hour. A value less than or equal to 0 (usually 0 is used) denotes that the unit must be off for the hour.

Field: maximum air flow rate

The maximum volumetric airflow rate (m^3/sec) through the fan coil unit. Since this is a constant air volume unit, this is also the design, rated airflow rate of the unit.

Field: maximum outside air flow rate

If the fan coil unit uses outside air, this field specifies the outside air volumetric flow rate (m^3/sec). This flow rate should be less than or equal to the maximum airflow rate. A value of zero specifies no outside air. Note that the outside airflow rate is fixed: it cannot change during the simulation

Field: air inlet node

The name of the HVAC system node from which the fan coil unit draws its indoor air. This should be one of zone exhaust nodes for the zone which the fan coil unit is serving.

Field: air outlet node

The name of the HVAC system node to which the fan coil unit sends its outlet air. This should be one of the inlet air nodes of the zone which is being served.

Field: outside air node

The name of the HVAC system node from which the fan coil unit draws its outside air. This should be the same node as the outside air node of the unit's outside air mixer.

Field: air relief node

The name of the HVAC system node (to which the fan coil unit exhausts its relief air. This should be the same node as the relief air node of the unit's outside air mixer.

Field: cold water control node

The name of the HVAC system node which regulates the flow of the cold water through the fan coil unit. This should be the same node as the water inlet node for the unit's cooling coil.

Field: hot water control node

The name of the HVAC system node which regulates the flow of hot water through the fan coil unit. This should be the same node as the water inlet node of the unit's hot water coil.

Field: outside air mixer name

The name of an outside air mixer component which composes part of the fan coil unit. Note that some of the input for the outside air mixer will duplicate input fields of the fan coil unit. The outside air node of the outside air mixer should be the same as the outside air node of the fan coil unit. The relief air node of the outside air mixer should be the same as the relief air node of the fan coil unit. In addition, the return air node of the outside air mixer should be the same node as the air inlet node of the fan coil unit. In addition, the outside air mixer's mixed air node should be the same as the inlet air node of the fan coil unit's fan.

Field: fan name

The name of a constant volume fan component that composes part of the fan coil unit. Note that the fan's maximum flow rate should be the same as the maximum airflow rate of the fan coil unit. The fan's inlet node should be the same as the outside air mixer's mixed air node. The fan's outlet node should be the same as the cooling coil's air inlet node.

Field: cooling coil name

The name of the cooling coil component that composes part of the fan coil unit. The cooling coil air inlet node should be the same as the fan outlet node. The cooling coil air outlet node should be the same as the heating coil air inlet node.

Field: maximum cold water flow

The maximum cold water mass flow rate (kg/sec) through the fan coil unit's cooling coil.

Field: minimum cold water flow

The minimum cold water mass flow rate (kg/sec) through the fan coil unit's cooling coil.

Field: cooling control offset

The control tolerance for the unit cooling output. The unit is controlled by matching the unit output to the zone demand. For units with water coils, the model must be numerically inverted to obtain a specified output. The control offset is the error tolerance used to terminate the numerical inversion procedure. Basically this is the fraction:

$$|(Q_{\text{fan coil, out}} - Q_{\text{zone load}})| \; / \; Q_{\text{zone load}}$$

Field: heating coil name

The name of the heating coil component that composes part of the fan coil unit. The heating coil air inlet node should be the same as the cooling coil outlet node. The heating coil air outlet node should be the same as the fan coil air outlet node.

Field: maximum hot water flow

The maximum hot water mass flow rate (kg/sec) through the fan coil unit's heating coil.

Field: minimum hot water flow

The minimum hot water mass flow rate (kg/sec) through the fan coil unit's heating coil.

Field: heating control offset

The control tolerance for the unit heating output. The unit is controlled by matching the unit output to the zone demand. For units with water coils, the model must be numerically inverted to obtain a specified output. The control offset is the error tolerance used to terminate the numerical inversion procedure. Basically this is the fraction:

$$|(Q_{\text{fan coil, out}} - Q_{\text{zone load}})| \; / \; Q_{\text{zone load}}$$

The input data dictionary definition of the unit is as follows.

```
FAN COIL UNIT:4 PIPE,
   A1 , \field name of fan coil unit
   A2 , \field availability schedule
        \type object-list
        \object-list ScheduleNames
   N1 , \field maximum air flow rate
        \units m3/s
   N2 , \field maximum outside air flow rate
        \units m3/s
   A3 , \field air inlet node
   A4 , \field air outlet node
   A5 , \field outside air node
   A6 , \field air relief node
   A7 , \field cold water control node
   A8 , \field hot water control node
   A9 , \field outside air mixer name
   A10, \field fan name
   A11, \field cooling coil name
   N3 , \field maximum cold water flow
        \units kg/s
   N4 , \field minimum cold water flow
        \units kg/s
   N5 , \field cooling control offset
   A12, \field heating coil name
   N6 , \field maximum hot water flow
        \units kg/s
   N7 , \field minimum hot water flow
        \units kg/s
   N8 ; \field heating control offset
```

An example input for a fan coil unit, including its constituent components, is shown below.

```
FAN COIL UNIT:4 PIPE,
       Zone1FanCoil, ! Name
       FanAndCoilAvailSched, ! on/off schedule
       0.84, ! air flow rate in m3/s
       0.05,  ! outside air flow rate in m3/s
       Zone1FanCoilAirInletNode, ! air inlet node to fancoil; also a zone exhaust node
       Zone1FanCoilAirOutletNode, ! air outlet node of fancoil; also a zone inlet node
       Zone1FanCoilOAInNode, ! fancoil outside air inlet node
       Zone1FanCoilExhNode, ! fancoil relief air node
       Zone1FanCoilChWInletNode, ! fancoil chilled water control node
       Zone1FanCoilHWInletNode, ! fancoil hot water control node
       Zone1FanCoilOAMixer, ! name of outside air mixer in fancoil
       Zone1FanCoilFan, ! name of fan in fancoil
       Zone1FanCoilCoolingCoil, ! name of cooling coil in fancoil
       1.0, ! max chilled water flow rate kg/s
       0.0, ! min chilled water flow rate kg/s
       0.001, ! tolerance on chilled water control
       Zone1FanCoilHeatingCoil, ! mame of heating coil in fancoil
       0.5, ! max hot water flow rate kg/s
       0.0, ! min hot water flow rate kg/s
       0.001; ! tolerance on hot water control

   OUTSIDE AIR MIXER,
       Zone1FanCoilOAMixer, ! name
       Zone1FanCoilOAMixerOutletNode, ! mixer outlet node
       Zone1FanCoilOAInNode, ! mixer OA node
       Zone1FanCoilExhNode, ! mixer relief node
       Zone1FanCoilAirInletNode; ! mixer inlet node
```

```
FAN:SIMPLE:ConstVolume,
    Zone1FanCoilFan, ! name
    FanAndCoilAvailSched, ! fan on/off schedule
    0.5, ! total efficiency
    75.0, ! pressure rise in Pascals (typical fan coil value)
    0.84, ! flow rate in m3/s
    0.9, ! motor efficiency
    1.0, ! motor in air stream fraction
    Zone1FanCoilOAMixerOutletNode, ! fancoil fan inlet node
    Zone1FanCoilFanOutletNode; ! fancoil fan outlet node

COIL:Water:SimpleCooling,
    Zone1FanCoilCoolingCoil, ! name
    FanAndCoilAvailSched, ! coil on/off schedule
    600., ! UA of coil
    1.0, ! max water flow in kg/s
    0.9, ! leaving air relative humidity
    Zone1FanCoilChWInletNode, ! water inlet node
    Zone1FanCoilChWOutletNode, ! water outlet node
    Zone1FanCoilFanOutletNode, ! coil air inlet node
    Zone1FanCoilCCOutletNode; ! coil air outlet node

COIL:Water:SimpleHeating,
    Zone1FanCoilHeatingCoil, ! name
    FanAndCoilAvailSched, ! coil on/off schedule
    400., ! UA of coil
    0.5, ! max water flow in kg/s
    Zone1FanCoilHWInletNode, ! water inlet node
    Zone1FanCoilHWOutletNode, ! water outlet node
    Zone1FanCoilCCOutletNode, ! coil air inlet node
    Zone1FanCoilAirOutletNode; ! coil air outlet node
```

Fan Coil Outputs

```
HVAC,Average,Fan Coil Heating Rate[W]
HVAC,Sum,Fan Coil Heating Energy[J]
HVAC,Average,Fan Coil Total Cooling Rate[W]
HVAC,Sum,Fan Coil Total Cooling Energy[J]
HVAC,Average,Fan Coil Sensible Cooling Rate[W]
HVAC,Sum,Fan Coil Sensible Cooling Energy[J]
HVAC,Average,Fan Coil Electric Power[W]
HVAC,Sum,Fan Coil Electric Consumption[J]
```

Field: Fan Coil Heating Rate[W]

This field reports the dry air heating addition rate of the fan coil unit to the zone it is serving in Watts. This is determined by outlet and zone air conditions and the mass flow rate through the unit.

Field: Fan Coil Heating Energy[J]

This field is the dry air heat addition of the fan coil unit to the zone it is serving in Joules over the time step being reported. This is determined by outlet and zone air conditions, the mass flow rate through the unit, and the time step.

Field: Fan Coil Total Cooling Rate[W]

This field is the total (sensible and latent) heat extraction rate of the fan coil unit from the zone it is serving in Watts. This is determined by the outlet and zone conditions and the mass flow rate through the unit.

Field: Fan Coil Total Cooling Energy[J]

This field is the total (sensible and latent) heat extraction of the fan coil unit from the zone it is serving in Joules over the time step being reported. This is determined by outlet and zone air conditions, the mass flow rate through the unit, and the time step.

Field: Fan Coil Sensible Cooling Rate[W]

This field reports the dry air sensible heat extraction rate of the fan coil unit from the zone it is serving in Watts. This is determined by the outlet and zone conditions and the mass flow rate through the unit.

Field: Fan Coil Sensible Cooling Energy[J]

This field is the dry air sensible heat extraction of the fan coil unit from the zone it is serving in Joules over the time step being reported. This is determined by the outlet and zone conditions, the mass flow rate through the unit, and the time step.

Field: Fan Coil Electric Power[W]

This field reports the electricity consumption rate of the fan coil unit in Watts.

Field: Fan Coil Electric Consumption[J]

This field is the electricity consumption of the fan coil unit in Joules over the time step being reported.

Unit Ventilator

Unit ventilators are zone equipment units which are assembled from other components. They contain a built-in outdoor air mixer, a fan, a heating coil, and a cooling coil. These components are described elsewhere in this document, except the built-in outdoor air mixer which is contained within the unit ventilator statement. The unit ventilator input simply requires the names of these other three components, which have to be described elsewhere in the input. The input also requires the name of an availability schedule, maximum airflow rate, outside air control information (control type and schedules), an outside airflow rate, and maximum and minimum hot and cold water mass flow rates. The unit is connected to the zone inlet and exhaust nodes and the outside air by specifying unit inlet, outlet, outside air and exhaust (relief) air node names. Note that the unit air inlet node should be the same as a zone exhaust node and the unit outlet node should be the same as a zone inlet node. In general, the unit ventilator input is very similar to the fan coil unit input, and the unit is connected to a hot water loop (demand side) through its hot water coil and to a chilled water loop (demand side) through its cooling coil.

The main difference between the fan coil and unit ventilator input is that the unit ventilator has a built-in outside air mixer with its own specialized controls. The outside air control type can be either “variable percent” or “fixed temperature”. In fixed temperature control, the amount of outside air is varied between the minimum outside air fraction (specified by a schedule) and 100% outside air to obtain a mixed air temperature as close as possible to the temperature schedule defined in the input. Variable percent control will also vary the amount of outside air between the minimum and maximum fractions (both specified in input by the user) to meet the load without the use of a coil if possible. These control types are based on the 1996 ASHRAE Systems and Equipment Handbook (pp. 31.1-31.3) description of unit ventilator systems.

The unit is controlled to meet the zone (remaining) heating or cooling demand. If there is a heating demand, the cooling coil is off and the hot water flow through the heating coil is throttled to meet the demand. The hot water control node must be specified (same as the hot water coil inlet node) as well as maximum and minimum possible hot water mass flow rates. If there is a cooling demand from the zone, the hot water coil is off and the chilled water flow through the cooling coil is throttled to meet the load. The cooling coil control node must be specified (same as the cooling coil inlet

node) and the maximum and minimum chilled water mass flow rates must be given. Finally both heating and cooling require a control offset, which is really the tolerance denoting how closely the fan coil unit will meet the heating or cooling load. The tolerance is always relative to the zone load.

Overall, control of the unit must consider the outside air. Here is a more detailed description of the overall unit control:

OFF: Unit is schedule off or there is no load on it. All flow rates are set to zero and the temperatures are set to zone conditions (except for the outside air inlet).

HEATING/VARIABLE PERCENT: The unit is on, there is a heating load, and variable percent control is specified. The outside air fraction is set to the minimum outside air fraction (schedule based) and the heating coil is activated.

HEATING/FIXED TEMPERATURE: The unit is on, there is a heating load, and fixed temperature control is specified. The outside air fraction is varied in an attempt to obtain a mixed air temperature equal to the user specified temperature (schedule based). The heating coil is activated, if necessary.

COOLING/NO COIL: The unit is on, there is a cooling load, and no coil is present or it has been scheduled off. Set the amount of outside air based on the control type. Simulate the "mixing box".

COOLING/WITH COIL: The unit is on, there is a cooling load, and a cooling coil is present and scheduled on. Tries to use outside air as best as possible, then calls a cooling coil.

Note: controls are strictly temperature based and do not factor humidity into the equation (not an enthalpy economy cycle but rather a simple return air economy cycle). In addition, temperature predictions are not strict energy balances here in the control routine though in the mixing routine an energy balance is preserved.

The input data dictionary definition of the unit ventilator is as follows:

Field: name of unit ventilator

This field is simply the identifying name that distinguishes one particular unit ventilator from another in the input data file. Like all other names in EnergyPlus, it is assumed that this is a unique character string and that no other unit ventilators use this same name.

Field: availability schedule

This field is a schedule name (ref: Schedule) that determines whether the unit ventilator is available to operate. The schedule is interpreted as a digital switch. If the schedule value of the unit ventilator availability schedule for a particular time frame is less than or equal to zero, then the unit ventilator is unavailable and will not operate. For any schedule value greater than zero, the unit ventilator is considered available and may operate, if necessary.

Field: air inlet node

This field is a node name (character string) used to identify the node that serves as the inlet (air side) to the unit ventilator. In EnergyPlus, nodes represent points between components or at various points in the loops. In a unit ventilator, the air inlet node to the system will typically be the same node as a zone outlet node. While a node name may be referenced more than once in an input data file, each node must have a unique name.

Field: air outlet node

This field is a node name (character string) used to identify the node that serves as the outlet (air side) to the unit ventilator. In EnergyPlus, nodes represent points between components or at various points in the loops. In a unit ventilator, the air outlet node from the system will typically be the same node as a zone inlet node. While a node name may be referenced more than once in an input data file, each node must have a unique name.

Field: post-fan air node

This field is a node name (character string) used to identify the node that serves as the air outlet to fan of the the unit ventilator. In EnergyPlus, nodes represent points between components or at various points in the loops. In a unit ventilator, the air outlet node from the fan is also considered the inlet node to the coils. While a node name may be referenced more than once in an input data file, each node must have a unique name.

Field: fan name

This field is the name (character string) of a fan (ref: FAN:SIMPLE:ConstantVolume, FAN:SIMPLE:VariableVolume) that is part of the unit ventilator system. This name links the unit ventilator to particular fan data entered elsewhere in the input data file. A fan name is required since it is the prime mover of air in the unit ventilator system.

Field: maximum air flow rate

This field allows the user to enter the maximum volumetric flow rate of air through the unit ventilator system in m^3/sec. This parameter should be some real number greater than zero.

Field: outside air control type

This field allows the user to control how outside air is used in the unit ventilator system. The unit ventilator system described by this syntax has its own outside air handler. The two options for outside air control are “VARIABLE PERCENT” and “FIXED TEMPERATURE”. Those phrases (with the space between the words as shown) are the only allowed choices for this parameter. In general, the variable percent control will attempt to vary the amount of outside air between some minimum and maximum schedules of fractions (see next two fields) to best meet the current heating or cooling load. In contrast, the fixed temperature control will vary the amount of outside air between the minimum schedule (fraction of maximum, see next field) and 100% available outside air to come as close as possible to a desired mixed air temperature (see 2 fields down) that can be scheduled. More information on the controls and operation of the unit ventilator are given in the section above (preceding the IDD/IDF description).

Field: minimum outside air fraction schedule (fraction of maximum)

This field contains a schedule name (ref: Schedule) that should contain values for the minimum outside air used by the unit ventilator system for IAQ or other reasons. Note that if the unit ventilator is scheduled off or if there is no load sensed in the zone that the system will not operate even to achieve the minimum air fraction. However, if the system is operating, it will always bring in this fraction of the maximum air flow rate (see maximum air flow rate field above).

Field: maximum outside air fraction or temperature schedule

This field can have one of two meanings depending the type of control selected in the outside air control type parameter above. If “VARIABLE PERCENT” control was selected, then this field is a schedule name (ref: Schedule) corresponding to a maximum air fraction schedule. Note that this is a fraction of the maximum airflow rate field (see parameter above) for the unit ventilator. If “FIXED TEMPERATURE” control was selected, then this field is still a schedule name (ref: Schedule), but it corresponds to a schedule of mixed air temperatures that the outside air control will try to attain.

Field: outside air node

This field is a node name (character string) used to identify the node associated with fresh air brought into the unit ventilator from the outdoor environment. While from a simulation standpoint this name is arbitrary and not a “necessity”, assigning a name to this node allows the user to receive output on conditions at this node to verify the correct operation of the unit ventilator.

Field: outside air relief node

This field is a node name (character string) used to identify the node associated with air exhausted out of the unit ventilator to the outdoor environment. While from a simulation standpoint this name is arbitrary and not a "necessity", assigning a name to this node allows the user to receive output on conditions at this node to verify the correct operation of the unit ventilator.

Field: post-"mixing box" node (inlet to coils)

This field is a node name (character string) used to identify the node associated with the "mixed" air of the unit ventilator. These conditions are post-"mixing box" since they are the conditions of the fraction of return air combined with the outside air. Since this is a simple system, this can also be viewed as the conditions of the air being sent to the coils. While from a simulation standpoint this name is arbitrary and not a "necessity", assigning a name to this node allows the user to receive output on conditions at this node to verify the correct operation of the unit ventilator.

Field: maximum outside air flow rate

This field allows the user to enter the maximum volumetric flow rate of outside air that can be brought into the unit ventilator system in m^3/sec. This parameter should be some real number greater than zero. Note that the value for this parameter may be less than the maximum air flow rate of the unit ventilator and this may affect the maximum fraction of outside air within the control strategy defined above. This parameter is an absolute maximum and will supercede any scheduled fraction of the unit ventilator maximum airflow rate.

Field: heating coil type

This field is the type of coil (ref: COIL:Water:SimpleHeating, COIL:Electric:Heating, COIL:Gas:Heating) that is used for heating in the unit ventilator system. This field must be one of the three following three keywords: COIL:Water:SimpleHeating, COIL:Electric:Heating, COIL:Gas:Heating. It is used in conjunction with the heating coil name (see next field) to specify the heating coil present within the system.

Field: heating coil name

This field is the name (character string) of the heating coil (ref: COIL:Water:SimpleHeating, COIL:Electric:Heating, COIL:Gas:Heating) that is part of the unit ventilator system. It is assumed that there is always some sort of heating coil associated with a unit ventilator system. This name links the unit ventilator to particular heating coil data entered elsewhere in the input data file.

Field: maximum hot water flow

This field allows the user to enter a maximum mass flow rate of water through a water heating coil in kg/sec. This number should be some number greater than zero and greater than the minimum hot water mass flow rate (see next field). Note that this parameter has no meaning for either an electric or a gas heating coil. This field is ignored for gas and electric heating coils.

Field: minimum hot water flow

This field allows the user to enter a minimum mass flow rate of water through a water heating coil in kg/sec. This number should be some number greater than zero and less than the maximum hot water mass flow rate (see previous field). Note that this parameter has no meaning for either an electric or a gas heating coil.

Field: hot water control node

This field corresponds to the water inlet node to the heating coil for a water coil. The water inlet node controls how a water heating coil operates and is required for the unit ventilator to function properly. This field is ignored for gas and electric heating coils.

Field: heating control offset

This field allows the user some control over how closely the heating coil will control the air side conditions. The relative size of this parameter relates directly to the closeness of the control. A very small value in this field will result in tight control and will probably result in larger numbers of iterations. A large value in this field will result in looser controls and could result in unsatisfactory fluctuations in supply conditions (that could in turn result in excessive iterations). Initial experience with this parameter lends to the recommendation of using 0.001 as a starting point. This field is ignored for gas and electric heating coils.

The control tolerance for the unit heating output. The unit is controlled by matching the unit output to the zone demand. For units with water coils, the model must be numerically inverted to obtain a specified output. The control offset is the error tolerance used to terminate the numerical inversion procedure. Basically this is the fraction:

$$|(Q_{\text{unit ventilator, out}} - Q_{\text{zone load}})| \; / \; Q_{\text{zone load}}$$

Field: cooling coil name

This field is the name (character string) of the cooling coil (ref: COIL:Water:SimpleCooling, COIL:Water:DetailedFlatCooling) that is part of the unit ventilator system. This name links the unit ventilator to particular cooling coil data entered elsewhere in the input data file. Note that a cooling coil is not a required part of a unit ventilator system. If no cooling coil is present, the previous field may be followed by a semi-colon and the remaining parameters in this statement may be ignored.

Field: cooling coil availability schedule

This field allows the user to schedule (ref: Schedule) when a cooling coil is available. This schedule can be anything the user wishes such as seasonally or during occupied hours. The value of the schedule is simply a digital trigger. If the value is less than or equal to zero, then the cooling coil is not available. If the value of the schedule is greater than zero, then the cooling coil is available and will be operated if there is a cooling load and ventilation alone will not meet the load.

Field: maximum cold water flow

This field allows the user to enter a maximum mass flow rate of water through a water cooling coil in kg/s. This number should be some number greater than zero and greater than the minimum chilled water mass flow rate (see next field).

Field: minimum cold water flow

This field allows the user to enter a minimum mass flow rate of water through a water cooling coil in kg/s. This number should be some number greater than zero and less than the maximum chilled water mass flow rate (see previous field).

Field: cold water control node

This field corresponds to the water inlet node to the cooling coil. The water inlet node controls how a water cooling coil operates and is required for the unit ventilator that has a cooling coil associated with it to function properly.

Field: cooling control offset

This field allows the user some control over how closely the cooling coil will control the air side conditions. The relative size of this parameter relates directly to the closeness of the control. A very small value in this field will result in tight control and will probably result in larger numbers of iterations. A large value in this field will result in looser controls and could result in unsatisfactory fluctuations in supply conditions (that could in turn result in excessive iterations). Initial experience with this parameter lends to the recommendation of using 0.001 as a starting point.

The control tolerance for the unit cooling output. The unit is controlled by matching the unit output to the zone demand. For units with water coils, the model must be numerically inverted to obtain a specified output. The control offset is the error tolerance used to terminate the numerical inversion procedure. Basically this is the fraction:

$$|(Q_{\text{unit ventilator, out}} - Q_{\text{zone load}})| \; / \; Q_{\text{zone load}}$$

```
UNIT VENTILATOR,
   A1 , \field name of unit ventilator
   A2 , \field availability schedule
        \type object-list
        \object-list ScheduleNames
   A3 , \field air inlet node
   A4 , \field air outlet node
   A5 , \field post-fan air node (inlet to heating coil)
   A6 , \field fan name
   N1 , \field maximum air flow rate
        \units m3/s
        \minimum> 0
   A7 , \field outside air control type
        \type choice
        \key VARIABLE PERCENT
        \key FIXED TEMPERATURE
   A8 , \field minimum outside air fraction schedule (fraction of maximum given below)
        \type object-list
        \object-list ScheduleNames
   A9 , \field maximum outside air fraction or temperature schedule
        \note that this depends on the control type as to whether it is a fraction or temperature
        \type object-list
        \object-list ScheduleNames
   A10, \field outside air node
   A11, \field outside air relief node
   A12, \field post-"mixing box" node (inlet to coils)
   N2 , \field maximum outside air flow rate
        \units m3/s
        \minimum> 0
   A13, \field heating coil type
        \type choice
        \key COIL:Water:SimpleHeating
        \key COIL:Electric:Heating
        \key COIL:Gas:Heating
   A14, \field heating coil name
   N3 , \field maximum hot water flow
        \units kg/s
        \minimum> 0
   N4 , \field minimum hot water flow
        \units kg/s
        \minimum 0
   A15, \field hot water control node
   N5 , \field heating control offset
   A16, \field cooling coil name
   A17, \field cooling coil availability schedule
        \type object-list
        \object-list ScheduleNames
   N6 , \field maximum cold water flow
        \units kg/s
        \minimum> 0
   N7 , \field minimum cold water flow
        \units kg/s
        \minimum 0
   A18, \field cold water control node
   N8 ; \field cooling control offset
```

An example input for a unit ventilator, including its constituent components, is shown below.

```
UNIT VENTILATOR,
    Zone1UnitVent, ! Name
    UnitVentAvailability, ! on/off schedule
    Zone1UnitVentAirInletNode, ! UnitVent air inlet node/zone exhaust node
    Zone1UnitVentAirOutletNode, ! UnitVent air outlet node/zone inlet node
    Zone1UnitVentFanOutletNode, ! fan outlet node
    Zone1UnitVentFan, ! name of fan in UnitVent
    0.84, ! air flow rate in m3/s
    VARIABLE PERCENT, ! control type, varies between some max and min
    UnitVentMinOA, ! minimum outside air schedule
    UnitVentMaxOA, ! maximum outside air schedule
    Zone1UnitVentOAInNode, ! UnitVent outside air inlet node
    Zone1UnitVentExhNode, ! UnitVent relief air node
    Zone1UnitVentOAMixerOutletNode, ! mixer outlet node
    0.84,  ! outside air flow rate in m3/s
    COIL:Water:SimpleHeating, ! type of heating coil
    Zone1UnitVentHeatingCoil, ! name of heating coil in UnitVent
    0.5, ! max hot water flow rate kg/s
    0.0, ! min hot water flow rate kg/s
    Zone1UnitVentHWInletNode, ! UnitVent hot water control node
    0.001, ! tolerance on hot water control
    Zone1UnitVentCoolingCoil, ! name of cooling coil in UnitVent
    FanAndCoilAvailSched, ! cooling coil availability schedule
    1.0, ! max chilled water flow rate kg/s
    0.0, ! min chilled water flow rate kg/s
    Zone1UnitVentChWInletNode, ! UnitVent chilled water control node
    0.001; ! tolerance on chilled water control

FAN:SIMPLE:ConstVolume,
    Zone1UnitVentFan, ! name
    UnitVentAvailability, ! fan on/off schedule
    0.5, ! total efficiency
    75.0, ! pressure rise in Pascals (typical fan coil value)
    0.84, ! flow rate in m3/s
    0.9, ! motor efficiency
    1.0, ! motor in air stream fraction
    Zone1UnitVentOAMixerOutletNode, ! UnitVent fan inlet node
    Zone1UnitVentFanOutletNode; ! UnitVent fan outlet node

COIL:Water:SimpleCooling,
    Zone1UnitVentCoolingCoil, ! name
    FanAndCoilAvailSched, ! coil on/off schedule
    600., ! UA of coil
    1.0, ! max water flow in kg/s
    0.9, ! leaving air relative humidity
    Zone1UnitVentChWInletNode, ! water inlet node
    Zone1UnitVentChWOutletNode, ! water outlet node
    Zone1UnitVentFanOutletNode, ! coil air inlet node
    Zone1UnitVentCCOutletNode; ! coil air outlet node

COIL:Water:SimpleHeating,
    Zone1UnitVentHeatingCoil, ! name
    FanAndCoilAvailSched, ! coil on/off schedule
    400., ! UA of coil
    0.5, ! max water flow in kg/s
    Zone1UnitVentHWInletNode, ! water inlet node
    Zone1UnitVentHWOutletNode, ! water outlet node
    Zone1UnitVentCCOutletNode, ! coil air inlet node
    Zone1UnitVentAirOutletNode; ! coil air outlet node
```

Unit Ventilator Outputs

```
HVAC,Average,Unit Ventilator Heating Rate[W]
HVAC,Sum,Unit Ventilator Heating Energy[J]
HVAC,Average,Unit Ventilator Total Cooling Rate[W]
HVAC,Sum,Unit Ventilator Total Cooling Energy[J]
HVAC,Average,Unit Ventilator Sensible Cooling Rate[W]
HVAC,Sum,Unit Ventilator Sensible Cooling Energy[J]
```

```
HVAC,Average,Unit Ventilator Fan Electric Power[W]
HVAC,Sum,Unit Ventilator Fan Electric Consumption[J]
```

Field: Unit Ventilator Heating Rate[W]

This field reports the heating output rate of the unit ventilator system to the zone it is serving in Watts. This is determined by outlet and zone air conditions and the mass flow rate through the unit ventilator.

Field: Unit Ventilator Heating Energy[J]

This field is the heating output of the unit ventilator system to the zone it is serving in Joules over the time step being reported. This is determined by outlet and zone air conditions, the mass flow rate through the unit ventilator, and the time step.

Field: Unit Ventilator Total Cooling Rate[W]

This field reports the total cooling (sensible plus latent) output rate of the unit ventilator system to the zone it is serving in Watts. This is determined by outlet and zone air conditions and the mass flow rate through the unit ventilator.

Field: Unit Ventilator Total Cooling Energy[J]

This field is the total cooling (sensible plus latent) output of the unit ventilator system to the zone it is serving in Joules over the time step being reported. This is determined by outlet and zone air conditions, the mass flow rate through the unit ventilator, and the time step.

Field: Unit Ventilator Sensible Cooling Rate[W]

This field reports the sensible cooling output rate of the unit ventilator system to the zone it is serving in Watts. This is determined by outlet and zone air conditions and the mass flow rate through the unit ventilator.

Field: Unit Ventilator Sensible Cooling Energy[J]

This field is the sensible cooling output of the unit ventilator system to the zone it is serving in Joules over the time step being reported. This is determined by outlet and zone air conditions, the mass flow rate through the unit ventilator, and the time step.

Field: Unit Ventilator Fan Electric Power[W]

This field reports the electric power consumption rate of the fan of the unit ventilator in Watts.

Field: Unit Ventilator Fan Electric Consumption[J]

This field reports the electric power consumed by the fan of the unit ventilator over the time step in Joules.

Unit Heater

Unit heaters are zone equipment units which are assembled from other components and are a simplification of unit ventilators. They contain only a fan and a heating coil. These components are described elsewhere in this document. The unit heater input simply requires the names of these components, which have to be described elsewhere in the input. The input also requires the name of an availability schedule, maximum airflow rate, and maximum and minimum hot water mass flow rates. The unit is connected to the zone inlet and exhaust nodes by specifying unit inlet and outlet node names. Note that the unit air inlet node should be the same as a zone exhaust node and the unit outlet node should be the same as a zone inlet node.

While the control of the heating coil is similar to the fan coil units and the unit ventilator, the overall control of the unit heater is much different. There are four different modes in which a unit heat can operate based on the user input:

OFF: Unit is schedule off. All flow rates are set to zero and the temperatures are set to zone conditions.

NO LOAD OR COOLING/ON-OFF FAN CONTROL: Unit is available, but there is no heating load. All flow rates are set to zero and the temperatures are set to zone conditions.

NO LOAD OR COOLING/CONTINUOUS FAN CONTROL: Unit is available and the fan is running (if it is scheduled to be available also). No heating is provided, only circulation via the fan running.

HEATING: The unit is on/available and there is a heating load. The heating coil is modulated (constant fan speed) to meet the heating load.

Control of the heating coil and its flow rate is identical to the fan coil unit and unit ventilator.

Field: name of unit heater

This field is simply the identifying name that distinguishes one particular unit heater from another in the input data file. Like all other names in EnergyPlus, it is assumed that this is a unique character string and that no other unit heaters use this same name.

Field: availability schedule

This field is a schedule name (ref: Schedule) that determines whether the unit heater is available to operate. The schedule is interpreted as a digital switch. If the schedule value of the unit heater availability schedule for a particular time frame is less than or equal to zero, then the unit heater is unavailable and will not operate. For any schedule value greater than zero, the unit heater is considered available and may operate.

Field: air inlet node

This field is a node name (character string) used to identify the node that serves as the inlet (air side) to the unit heater. In EnergyPlus, nodes represent points between components or at various points in the loops. In a unit heater, the air inlet node to the system will typically be the same node as a zone outlet node. While a node name may be referenced more than once in an input data file, each node must have a unique name.

Field: air outlet node

This field is a node name (character string) used to identify the node that serves as the outlet (air side) to the unit heater. In EnergyPlus, nodes represent points between components or at various points in the loops. In a unit heater, the air outlet node from the system will typically be the same node as a zone inlet node. While a node name may be referenced more than once in an input data file, each node must have a unique name.

Field: post-fan air node

This field is a node name (character string) used to identify the node that serves as the air outlet to fan of the the unit heater. In EnergyPlus, nodes represent points between components or at various points in the loops. In a unit heater, the air outlet node from the fan is also considered the inlet node to the coils. While a node name may be referenced more than once in an input data file, each node must have a unique name.

Field: fan name

This field is the name (character string) of a fan (ref: FAN:SIMPLE:ConstantVolume, FAN:SIMPLE:VariableVolume) that is part of the unit heater system. This name links the unit

heater to particular fan data entered elsewhere in the input data file. A fan name is required since it is the prime mover of air in the unit heater system.

Field: maximum air flow rate

This field allows the user to enter the maximum volumetric flow rate of air through the unit heater system in m^3/s. This parameter should be some real number greater than zero.

Field: fan control type

This field allows the user to define how the unit heater will operate under "no load" or cooling conditions. The user may select from two options. If the "ONOFF" control is selected, then the fan will not run unless there is a heating load. If the fan does not run, this effectively shuts the unit heater system off (there is no option to simply run the heating coil and allow natural convection to transfer heat from the unit to the zone). If the "CONTINUOUS" control is selected, then the fan will always run if the unit heater is available. This will produce air movement in the zone but also add some amount of heat to the energy balance since the fan will generate some heat. For more information on controlling the operation of the unit heater, see the general description given above.

Field: heating coil type

This field is the type of coil (ref: COIL:Water:SimpleHeating, COIL:Electric:Heating, COIL:Gas:Heating) that is used for heating in the unit heater system. This field must be one of the three following three keywords: COIL:Water:SimpleHeating, COIL:Electric:Heating, COIL:Gas:Heating. It is used in conjunction with the heating coil name (see next field) to specify the heating coil present within the system.

Field: heating coil name

This field is the name (character string) of the heating coil (ref: COIL:Water:SimpleHeating, COIL:Electric:Heating, COIL:Gas:Heating) that is part of the unit heater system. It is assumed that there is always some sort of heating coil associated with a unit heater system. This name links the unit ventilator to particular heating coil data entered elsewhere in the input data file.

Field: maximum hot water flow

This field allows the user to enter a maximum mass flow rate of water through a water heating coil in kg/s. This number should be some number greater than zero and greater than the minimum hot water mass flow rate (see next field). Note that this parameter has no meaning for either an electric or a gas heating coil.

Field: minimum hot water flow

This field allows the user to enter a minimum mass flow rate of water through a water heating coil in kg/s. This number should be some number greater than zero and less than the maximum hot water mass flow rate (see previous field). Note that this parameter has no meaning for either an electric or a gas heating coil.

Field: hot water control node

This field corresponds to the water inlet node to the heating coil for a water coil. The water inlet node controls how a water heating coil operates and is required for the unit ventilator to function properly. This field is ignored for gas and electric heating coils.

Field: heating control offset

This field allows the user some control over how closely the heating coil will control the air side conditions. The relative size of this parameter relates directly to the closeness of the control. A very small value in this field will result in tight control and will probably result in larger numbers of

iterations. A large value in this field will result in looser controls and could result in unsatisfactory fluctuations in supply conditions (that could in turn result in excessive iterations). Initial experience with this parameter lends to the recommendation of using 0.001 as a starting point. This field is ignored for gas and electric heating coils.

The control tolerance for the unit heating output. The unit is controlled by matching the unit output to the zone demand. For units with water coils, the model must be numerically inverted to obtain a specified output. The control offset is the error tolerance used to terminate the numerical inversion procedure. Basically this is the fraction:

$$|(Q_{\text{unit heater, out}} - Q_{\text{zone load}})| \; / \; Q_{\text{zone load}}$$

The IDD definition for the Unit Heater follows:

```
UNIT HEATER,
   A1 , \field name of unit heater
   A2 , \field availability schedule
        \type object-list
        \object-list ScheduleNames
   A3 , \field air inlet node
   A4 , \field air outlet node
   A5 , \field fan name
   N1 , \field maximum air flow rate
        \units m3/s
        \minimum> 0
   A6 , \field fan control type
        \type choice
        \key ONOFF
        \key CONTINUOUS
   A7 , \field post-fan air node (inlet to heating coil)
   A8 , \field heating coil type
        \type choice
        \key COIL:Water:SimpleHeating
        \key COIL:Electric:Heating
        \key COIL:Gas:Heating
   A9 , \field heating coil name
   N2 , \field maximum hot water flow
        \units kg/s
        \minimum> 0
   N3 , \field minimum hot water flow
        \units kg/s
        \minimum 0
   A10 , \field hot water control node
   N4 ; \field heating control offset
```

An example input for a unit heater, including its constituent components, is shown below.

```
UNIT HEATER,
    Zone1UnitHeat, ! Name
    UnitHeatAvailability, ! on/off schedule
    Zone1UnitHeatAirInletNode, ! UnitHeat air inlet node/zone exhaust node
    Zone1UnitHeatAirOutletNode, ! UnitHeat air outlet node/zone inlet node
    Zone1UnitHeatFan, ! name of fan in UnitHeat
    0.84, ! air flow rate in m3/s
    CONTINUOUS, ! fan control type
    Zone1UnitHeatFanOutletNode, !fan outlet node
    COIL:Water:SimpleHeating, ! type of coil
    Zone1UnitHeatHeatingCoil, ! name of heating coil in UnitHeat
    0.5, ! max hot water flow rate kg/s
    0.0, ! min hot water flow rate kg/s
    Zone1UnitHeatHWInletNode, ! UnitHeat hot water control node
    0.001; ! tolerance on hot water control

FAN:SIMPLE:ConstVolume,
    Zone1UnitHeatFan, ! name
    UnitHeatAvailability, ! fan on/off schedule
    0.5, ! total efficiency
    75.0, ! pressure rise in Pascals (typical fan coil value)
    0.84, ! flow rate in m3/s
    0.9, ! motor efficiency
    1.0, ! motor in air stream fraction
    Zone1UnitHeatAirInletNode, ! UnitHeat fan inlet node
    Zone1UnitHeatFanOutletNode; ! UnitHeat fan outlet node

COIL:Water:SimpleHeating,
    Zone1UnitHeatHeatingCoil, ! name
    FanAndCoilAvailSched, ! coil on/off schedule
    400., ! UA of coil
    0.5, ! max water flow in kg/s
    Zone1UnitHeatHWInletNode, ! water inlet node
    Zone1UnitHeatHWOutletNode, ! water outlet node
    Zone1UnitHeatFanOutletNode, ! coil air inlet node
    Zone1UnitHeatAirOutletNode; ! coil air outlet node
```

Unit Heater Outputs

```
HVAC,Average,Unit Heater Heating Rate[W]
HVAC,Sum,Unit Heater Heating Energy[J]
HVAC,Average,Unit Heater Fan Electric Power[W]
HVAC,Sum,Unit Heater Fan Electric Consumption[J]
```

Field: Unit Heater Heating Rate[W]

This field reports the heating output rate of the unit heater system to the zone it is serving in Watts. This is determined by outlet and zone air conditions and the mass flow rate through the unit heater.

Field: Unit Heater Heating Energy[J]

This field is the heating output of the unit heater system to the zone it is serving in Joules over the time step being reported. This is determined by outlet and zone air conditions, the mass flow rate through the unit heater, and the time step.

Field: Unit Heater Fan Electric Power[W]

This field reports the electric power consumption rate of the fan of the unit heater in Watts.

Field: Unit Heater Fan Electric Consumption[J]

This field reports the electric power consumed by the fan of the unit heater over the time step in Joules.

Furnace:BlowThru:HeatOnly

The EnergyPlus blowthru furnace is a “virtual” component that consists of an ON-OFF fan component and a GAS or ELECTRIC heating coil component as shown in the Figure below.

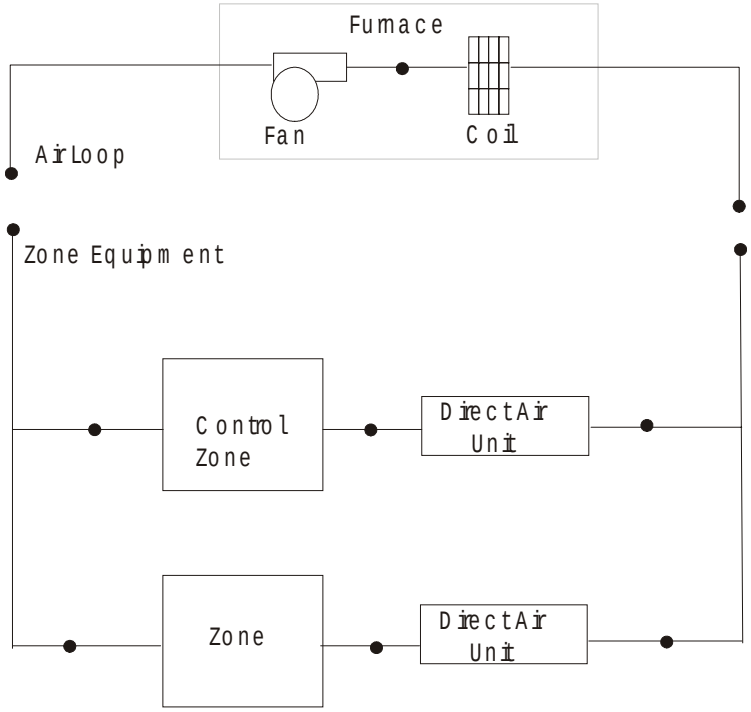

Figure 29. Schematic of EnergyPlus Furnace Model

Links to the fan and heating coil specifications are provided in the furnace input data syntax. In addition the control zone name, the fraction of the total furnace air flow delivered to the control zone and furnace design operating conditions are specified by the furnace syntax as shown in the Energy+.idd specification below.

```
FURNACE:BLOWTHRU:HEATONLY,
   A1 , \field Name of furnace
   A2 , \field Availability schedule
        \type object-list
        \object-list ScheduleNames
   A3 , \field Furnace inlet node name
   A4 , \field Furnace outlet node name
   A5 , \field Operating Mode
        \type choice
        \key CycFanCycCoil
        \key ContFanCycCoil
   N1,  \field Furnace heating capacity
        \note  Should match heating coil output
        \units W
   N2,  \field Maximum supply air temperature from furnace heater
        \units C
   N3,  \field Design air flow rate through the furnace
        \note  Needs to match fan size
        \units m3/s
   A6,  \field Controlling zone or thermostat location
   N4,  \field Fraction of the total or design volume flow that goes through the controlling zone
        \minimum> 0
        \maximum 1
   A7,  \field Supply fan type
        \note  Only works with ON/OFF Fan
   A8,  \field Supply fan name
   A9,  \field Fan outlet node
        \note  Needs to match in the fan object
   A10, \field Heating coil type
        \note  Only works with gas and electric coils
   A11; \field Heating coil name
```

Field: Name of furnace

This alpha field contains the identifying name for the furnace.

Field: Availability schedule

This alpha field contains the schedule name which contains information on the availability of the furnace to operate.

Field: Furnace inlet node name

This alpha field contains the furnace inlet node name.

Field: Furnace outlet node name

This alpha field contains the furnace outlet node name.

Field: Operating Mode

This input field has two choices: CycFanCycCoil or ContFanCycCoil. The first choice stands for “cycling fan cycling coil”. This means that the furnace supply air fan and heating coil cycle on and off together to meet the heating load (a.k.a. AUTO fan). The second choice stands for “continuous fan cycling coil”. The supply fan runs continuously while the heating coil cycles to meet the heating load.

Field: Furnace heating capacity

This numeric field contains the furnace heating capacity in Watts. This capacity should match the specified furnace heating coil output.

Field: Maximum supply air temperature from furnace heater

This numeric field contains the design operating furnace air outlet temperature in degrees C when the furnace is heating.

Field: Design air flow rate through the furnace

This numeric field shows the design volumetric flow rate of the furnace in cubic meters per second. This volumetric flow rate should match the flow rate specified for the furnace fan.

Field: Controlling zone or thermostat location

This alpha field contains the identifying zone name where the thermostat controlling the furnace is located.

Field: Fraction of the total or design volume flow that goes through the controlling zone

This numeric field contains the fraction (>0 to 1) of the total furnace volumetric flow rate that is supplied to the zone with the furnace thermostat.

Field: Supply fan type

This alpha field contains the identifying type of fan specified in the furnace. Fan type must be ON-OFF.

Field: Supply fan name

This alpha field contains the identifying name given to the furnace fan.

Field: Fan outlet node

This alpha field contains the identifying name given to the furnace fan Outlet Node, as specified in the fan object.

Field: Heating coil type

This alpha field contains the identifying type of heating coil specified in the furnace. Heating coil type must be GAS or ELECTRIC.

Field: Heating coil name

This alpha field contains the identifying name given to the furnace heating coil.

As shown in the example below, correct specification of the furnace requires specification of the following objects in addition to the furnace object:

1. ON-OFF fan
2. heating coil
3. direct air unit for each zone served by furnace

It should be noted that the volumetric air flow rate specified in the direct air unit for the controlling zone should properly reflect the fractional volumetric air flow rate specified in the furnace object.

```
FURNACE:BLOWTHRU:HEATONLY, Gas Furnace 1,
      FanAndCoilAvailSched,                 !Availability schedule name
      Air Loop Inlet Node, Air Loop Outlet Node,  ! Furnace inlet and outlet air nodes
      CycFanCycCoil,  ! Operation mode – cycling supply air fan, cycling coil
      20000,          !Furnace heating capacity - should match heating coil output [W]
      80,             !Maximum supply air temperature from furnace heater [C]
      1.3,            !Design air flow rate through the furnace [m^3/s] - Needs to match fan size
      East Zone,      !Controlling zone or thermostat location
      0.276923,       !Fraction of the volume flow that goes through the controlling zone
      FAN:SIMPLE:ONOFF, Supply Fan 1,  !Supply fan type and name
      Heating Coil Air Inlet Node,     !Fan outlet node and needs to match in the fan object
      COIL:GAS:HEATING, Furnace Coil;  !Heating coil type and name

   COIL:Gas:Heating,
      Furnace Coil,          !Name of heating coil
      FanAndCoilAvailSched,  !Coil Schedule
      0.8 ,                  !Gas Burner Efficiency of the Coil
      20000 ,                !Nominal Capacity of the Coil [W]
      Heating Coil Air Inlet Node, Air Loop Outlet Node;     !Coil Air Side Inlet & Outlet Node

   FAN:SIMPLE:ONOFF,
      Supply Fan 1,             !Fan Name
      FanAndCoilAvailSched,     !Fan Schedule
      0.7,                      !Fan Efficiency
      600.0,                    !Delta Pressure [N/M^2]
      1.3,                      !Max Vol Flow Rate  [m^3/Sec]
      0.00,                     !Min Vol Flow Rate  [m^3/Sec]
      0.9,                      !motor efficiency
      1.0,                      !motor in air stream fraction
      Air Loop Inlet Node, Heating Coil Air Inlet Node;      !Inlet Node, Outlet Node

    DIRECT AIR,
        Zone1DirectAir,
        FanAndCoilAvailSched,
        Zone 1 Inlet Node,
        0.47;

    DIRECT AIR,
        Zone2DirectAir,
        FanAndCoilAvailSched,
        Zone 2 Inlet Node,
        0.36;

    DIRECT AIR,
        Zone3DirectAir,
        FanAndCoilAvailSched,
        Zone 3 Inlet Node,
        0.47;
```

Example of Heat-Only Furnace Specification

Furnace:BlowThru:HeatOnly Outputs

```
HVAC,Average,Furnace RunTime Fraction
```

Furnace:BlowThru:HeatCool

The blowthru heat/cool furnace is a “virtual” component that consists of an ON-OFF fan component, a GAS or ELECTRIC heating coil component, and a DX cooling coil component as shown in the Figure below.

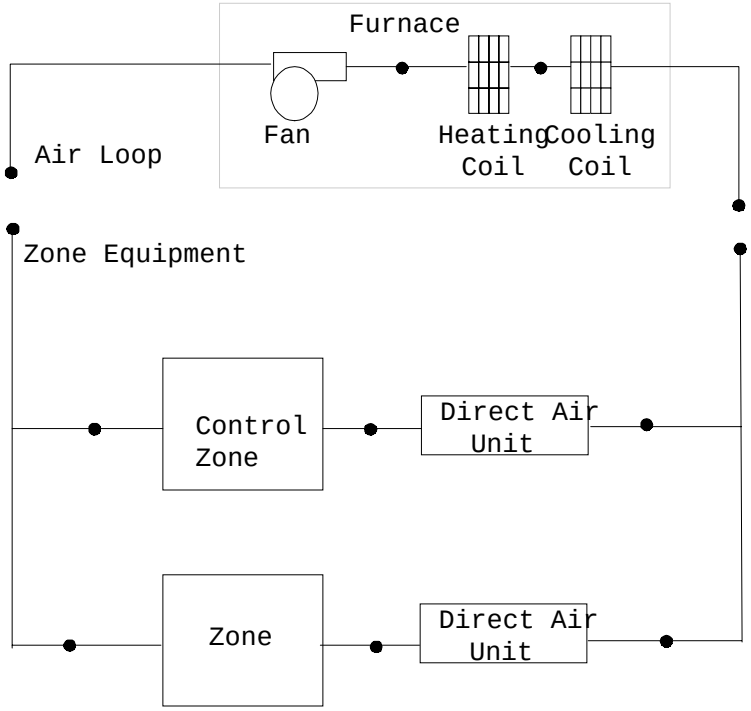

Figure 30. Schematic of EnergyPlus Heat/Cool Furnace

Links to the fan, heating coil and DX cooling coil specifications are provided in the furnace input data syntax. In addition the control zone name, the fraction of the total furnace air flow delivered to the control zone and furnace design operating conditions are specified by the furnace syntax as shown in the Energy+.idd specification below.

```
FURNACE:BLOWTHRU:HEATCOOL,
   A1,  \field Name of furnace
   A2,  \field Availability schedule
        \type object-list
        \object-list ScheduleNames
   A3,  \field Furnace inlet node name
   A4,  \field Furnace outlet node name
   A5,  \field Operating Mode
        \type choice
        \key CycFanCycCoil
        \key ContFanCycCoil
   N1,  \field Furnace heating capacity
        \note  Should match heating coil output
        \units W
   N2,  \field Maximum supply air temperature from furnace heater
        \units C
   N3,  \field Design air flow rate through the furnace
        \note  Needs to match fan size
        \units m3/s
   A6,  \field Controlling zone or thermostat location
   N4,  \field Fraction of the total or design volume flow that goes through the controlling zone
        \minimum> 0
        \maximum 1
```

```
A7,  \field Supply fan type
     \note  Only works with ON/OFF Fan
A8,  \field Supply fan name
A9,  \field Fan outlet node
     \note  Needs to match in the fan object
A10, \field Heating coil type
     \note  Only works with gas and electric coils
A11, \field Heating coil name
A12, \field Cooling coil type
     \note  Only works with DX cooling coil
A13, \field Cooling coil name
A14; \field Cooling coil inlet node
     \note  Needs to match in the cooling coil object
```

Field: Name of furnace

This alpha field contains the identifying name for the furnace.

Field: Availability schedule

This alpha field contains the schedule name which contains information on the availability of the furnace to operate.

Field: Furnace inlet node name

This alpha field contains the furnace inlet node name.

Field: Furnace outlet node name

This alpha field contains the furnace outlet node name.

Field: Operating Mode

This input field has two choices: CycFanCycCoil or ContFanCycCoil. The first choice stands for "cycling fan cycling coil". This means that the furnace supply air fan and the heating or cooling coil cycle on and off together to meet the heating or cooling load (a.k.a. AUTO fan). The second choice stands for "continuous fan cycling coil". The supply fan runs continuously while the heating or cooling coil cycles to meet the load.

Field: Furnace heating capacity

This numeric field contains the furnace heating capacity in Watts. This capacity should match the specified furnace heating coil output.

Field: Maximum supply air temperature from furnace heater

This numeric field contains the design operating furnace air outlet temperature in degrees C when the furnace is heating.

Field: Design air flow rate through the furnace

This numeric field shows the design volumetric flow rate of the furnace in cubic meters per second. This volumetric flow rate should match the flow rate specified for the furnace fan.

Field: Controlling zone or thermostat location

This alpha field contains the identifying zone name where the thermostat controlling the furnace is located.

Field: Fraction of the total or design volume flow that goes through the controlling zone

This numeric field contains the fraction (>0 to 1) of the total furnace volumetric flow rate that is supplied to the zone with the furnace thermostat.

Field: Supply fan type

This alpha field contains the identifying type of fan specified in the furnace. Fan type must be ON-OFF.

Field: Supply fan name

This alpha field contains the identifying name given to the furnace fan.

Field: Fan outlet node

This alpha field contains the identifying name given to the furnace fan Outlet Node, as specified in the fan object.

Field: Heating coil type

This alpha field contains the identifying type of heating coil specified in the furnace. Heating coil type must be GAS or ELECTRIC.

Field: Heating coil name

This alpha field contains the identifying name given to the furnace heating coil.

Field: Cooling coil type

This alpha field contains the identifying type of cooling coil specified in the furnace. Cooling coil type must be DX.

Field: Cooling coil name

This alpha field contains the identifying name given to the furnace cooling coil.

Field: Cooling coil inlet node

This alpha field contains the identifying name given to the furnace cooling coil inlet node, as specified in the cooling coil object.

As shown in the example below, correct specification of the furnace requires specification of the following objects in addition to the furnace object:

1. ON-OFF fan
2. heating coil
3. cooling coil
4. direct air unit for each zone served by the furnace

It should be noted that the volumetric air flow rate specified in the direct air unit for the controlling zone should properly reflect the fractional volumetric air flow rate specified in the furnace object. In addition, the DX cooling coil operation mode must be specified consistently with the furnace operating mode (e.g., with CycFanCycCoil for Furnace operating mode, the DX cooling coil operation mode must be CycFanCycComp).

```
FURNACE:BLOWTHRU:HEATCOOL, GasHeat DXAC Furnace 1,    !Furnace name
      FanAndCoilAvailSched,                           !Availability schedule name
      Air Loop Inlet Node, Air Loop Outlet Node, ! Furnace inlet and outlet air nodes
      CycFanCycCoil,  ! Furnace operating mode – must match DX coil operating mode
      25000,          !Furnace heating capacity - should match heating coil output[W]
      80,             !Maximum supply air temperature from furnace heater [C]
      1.3,            !Design air flow rate through the furnace [m^3/s] - Needs to match fan size
      East Zone,      !Controlling zone or thermostat location
      0.276923,       !Fraction of the volume flow that goes through the controlling zone
      FAN:SIMPLE:ONOFF, Supply Fan 1,   !Supply fan type and name
      Heating Coil Air Inlet Node,      !Fan outlet node and needs to match in the fan object
      COIL:GAS:HEATING, Furnace Heating Coil 1, !Heating coil type and name
      COIL:DX:DOE2, Furnace ACDXCoil 1, !Cooling coil type and name
      Cooling Coil Air Inlet Node; !Cooling coil inlet node, needs to match in cooling coil object

   COIL:GAS:HEATING,
      Furnace Heating Coil 1, !Name of heating coil
      FanAndCoilAvailSched,   !Coil Schedule
      0.8 ,                   !Gas Burner Efficiency of the Coil
      25000,                  !Nominal Capacity of the Coil [W]
      Heating Coil Air Inlet Node, Cooling Coil Air Inlet Node; !Coil Air Side Inlet & Outlet Node

   COIL:DX:DOE2,
      Furnace ACDXCoil 1,           !Name of cooling coil
      FanAndCoilAvailSched,         !Coil Schedule
      25000,                        !Rated total cooling capacity [W]
      0.75,                         !Rated sensible heat ratio
      3.0,                          !Rated COP
      1.3,                          !Rated air flow rate [m3/s]
      Cooling Coil Air Inlet Node, !Coil air inlet node
      Air Loop Outlet Node,         !Coil air outlet node
      WindACCoolCapFT,              !Cooling capacity modifier curve (temperature,C)
      WindACCoolCapFFF,             !Cooling capacity modifier curve (flow fraction)
      WindACEIRFT,                  !Energy input ratio modifier curve (temperature,C)
      WindACPLFFPLR,                !Energy input ratio modifier curve (flow fraction)
      CycFanCycComp,                !Operation mode (cycling fan, cycling compressor)

   FAN:SIMPLE:ONOFF,
      Supply Fan 1,          !Fan Name
      FanAndCoilAvailSched, !Fan Schedule
      0.7,                   !Fan Efficiency
      600.0,                 !Delta Pressure [N/M^2]
      1.3,                   !Max Vol Flow Rate  [m^3/Sec]
      0.00,                  !Min Vol Flow Rate  [m^3/Sec]
      0.9,                   !motor efficiency
      1.0,                   !motor in air stream fraction
      Air Loop Inlet Node, Heating Coil Air Inlet Node;  !Inlet Node, Outlet Node

    DIRECT AIR,
        Zone1DirectAir,
        FanAndCoilAvailSched,
        Zone 1 Inlet Node,
        0.47;

    DIRECT AIR,
        Zone2DirectAir,
        FanAndCoilAvailSched,
        Zone 2 Inlet Node,
        0.36;

    DIRECT AIR,
        Zone3DirectAir,
        FanAndCoilAvailSched,
        Zone 3 Inlet Node,
        0.47;
```

Example of Heat/Cool Furnace Specification

Furnace:BlowThru:HeatCool Outputs

```
HVAC,Average,Furnace RunTime Fraction
```

UnitarySystem:BlowThru:HeatOnly

The UnitarySystem:BlowThru:HeatOnly is identical to the Furnace:BlowThru:HeatOnly model (see Furnace:BlowThru:HeatOnly).

The EnergyPlus blowthru, heat-only unitary system is a “virtual” component that consists of an ON-OFF fan component and a GAS or ELECTRIC heating coil component as shown in the Figure below.

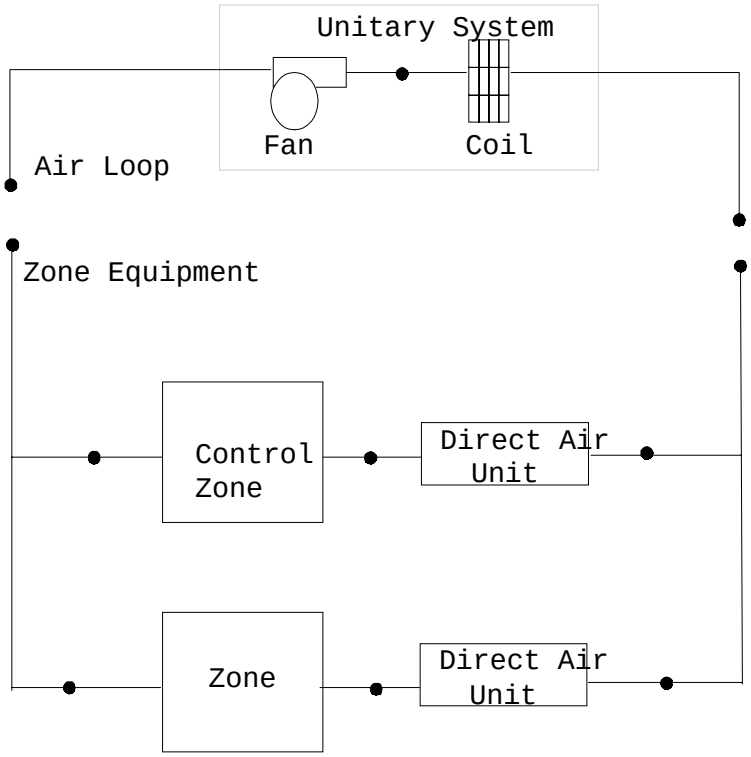

Figure 31. Schematic of EnergyPlus Heat-Only Unitary System

Links to the fan and heating coil specifications are provided in the unitary system input data syntax. In addition the control zone name, the fraction of the total system air flow delivered to the control zone and system design operating conditions are specified by the unitary system syntax as shown in the Energy+.idd specification below.

```
UNITARYSYSTEM:BLOWTHRU:HEATONLY,
   A1 , \field Name of unitary system
   A2 , \field Availability schedule
        \type object-list
        \object-list ScheduleNames
   A3 , \field Unitary system inlet node name
   A4 , \field Unitary system outlet node name
   A5 , \field Operating Mode
        \type choice
        \key CycFanCycCoil
        \key ContFanCycCoil
   N1,  \field Unitary system heating capacity
        \note  Should match heating coil output
        \units W
   N2,  \field Maximum supply air temperature from unitary system heater
        \units C
   N3,  \field Design air flow rate through the unitary system
        \note  Needs to match fan size
        \units m3/s
   A6,  \field Controlling zone or thermostat location
   N4,  \field Fraction of the total or design volume flow that goes through the controlling zone
        \minimum> 0
        \maximum 1
   A7,  \field Supply fan type
        \note  Only works with ON/OFF Fan
   A8,  \field Supply fan name
   A9,  \field Fan outlet node
        \note  Needs to match in the fan object
   A10, \field Heating coil type
        \note  Only works with gas and electric coils
   A11; \field Heating coil name
```

Field: Name of unitary system

This alpha field contains the identifying name for the unitary system.

Field: Availability schedule

This alpha field contains the schedule name which contains information on the availability of the unitary system to operate.

Field: Unitary system inlet node name

This alpha field contains the unitary system inlet node name.

Field: Unitary system outlet node name

This alpha field contains the unitary system outlet node name.

Field: Operating Mode

This input field has two choices: CycFanCycCoil or ContFanCycCoil. The first choice stands for “cycling fan cycling coil”. This means that the supply air fan and heating coil cycle on and off together to meet the heating load (a.k.a. AUTO fan). The second choice stands for “continuous fan cycling coil”. The supply fan runs continuously while the heating coil cycles to meet the heating load.

Field: Unitary system heating capacity

This numeric field contains the system heating capacity in Watts. This capacity should match the specified unitary system heating coil output.

Field: Maximum supply air temperature from unitary system heater

This numeric field contains the design operating air outlet temperature in degrees C when the unitary system is heating.

Field: Design air flow rate through the unitary system

This numeric field shows the design volumetric flow rate of the unitary system in cubic meters per second. This volumetric flow rate should match the flow rate specified for the unitary system fan.

Field: Controlling zone or thermostat location

This alpha field contains the identifying zone name where the thermostat controlling the unitary system is located.

Field: Fraction of the total or design volume flow that goes through the controlling zone

This numeric field contains the fraction (>0 to 1) of the total system volumetric flow rate that is supplied to the zone with the unitary system thermostat.

Field: Supply fan type

This alpha field contains the identifying type of fan specified in the unitary system. Fan type must be ON-OFF.

Field: Supply fan name

This alpha field contains the identifying name given to the unitary system fan.

Field: Fan outlet node

This alpha field contains the identifying name given to the unitary system fan Outlet Node, as specified in the fan object.

Field: Heating coil type

This alpha field contains the identifying type of heating coil specified in the unitary system. Heating coil type must be GAS or ELECTRIC.

Field: Heating coil name

This alpha field contains the identifying name given to the unitary system heating coil.

As shown in the example below, correct specification of the heat-only unitary system requires specification of the following objects in addition to the unitary system object:

1. ON-OFF fan
2. heating coil
3. direct air unit for each zone served by the unitary system

It should be noted that the volumetric air flow rate specified in the direct air unit for the controlling zone should properly reflect the fractional volumetric air flow rate specified in the unitary system object.

```
UNITARYSYSTEM:BLOWTHRU:HEATONLY, Gas Unitary System 1,   !Unitary system name
      FanAndCoilAvailSched,                              !Availability schedule name
      Air Loop Inlet Node, Air Loop Outlet Node,   !Unitary system inlet and outlet air nodes
      CycFanCycCoil,  !Operation mode – cycling supply air fan, cycling coil
      20000,          !Unitary system heating capacity - should match heating coil output [W]
      80,             !Maximum supply air temperature from system heater [C]
      1.3,            !Design air flow rate through the system [m^3/s] - Needs to match fan size
      East Zone,      !Controlling zone or thermostat location
      0.276923,       !Fraction of the volume flow that goes through the controlling zone
      FAN:SIMPLE:ONOFF, Supply Fan 1,  !Supply fan type and name
      Heating Coil Air Inlet Node,     !Fan outlet node and needs to match in the fan object
      COIL:GAS:HEATING, Unitary System Heating Coil;  !Heating coil type and name

   COIL:Gas:Heating,
      Unitary System Heating Coil, !Name of heating coil
      FanAndCoilAvailSched,        !Coil Schedule
      0.8 ,                        !Gas Burner Efficiency of the Coil
      20000 ,                      !Nominal Capacity of the Coil [W]
      Heating Coil Air Inlet Node, Air Loop Outlet Node;   !Coil Air Side Inlet & Outlet Node

   FAN:SIMPLE:ONOFF,
      Supply Fan 1,             !Fan Name
      FanAndCoilAvailSched,     !Fan Schedule
      0.7,                      !Fan Efficiency
      600.0,                    !Delta Pressure [N/M^2]
      1.3,                      !Max Vol Flow Rate  [m^3/Sec]
      0.00,                     !Min Vol Flow Rate  [m^3/Sec]
      0.9,                      !motor efficiency
      1.0,                      !motor in air stream fraction
      Air Loop Inlet Node, Heating Coil Air Inlet Node;      !Inlet Node, Outlet Node

    DIRECT AIR,
        Zone1DirectAir,
        FanAndCoilAvailSched,
        Zone 1 Inlet Node,
        0.47;

    DIRECT AIR,
        Zone2DirectAir,
        FanAndCoilAvailSched,
        Zone 2 Inlet Node,
        0.36;

    DIRECT AIR,
        Zone3DirectAir,
        FanAndCoilAvailSched,
        Zone 3 Inlet Node,
        0.47;
```

Example of Heat-Only Unitary System Specification

UnitarySystem:BlowThru:HeatOnly Outputs

```
HVAC,Average,Unitary System RunTime Fraction
```

UnitarySystem:BlowThru:HeatCool

The UnitarySystem:BlowThru:HeatCool is the identical model to the Furnace:BlowThru:HeatCool object (see Furnace:BlowThru:HeatCool).

UnitarySystem:BlowThru:HeatCool

The blowthru heat/cool unitary system is a “virtual” component that consists of an ON-OFF fan component, a GAS or ELECTRIC heating coil component, and a DX cooling coil component as shown in the Figure below.

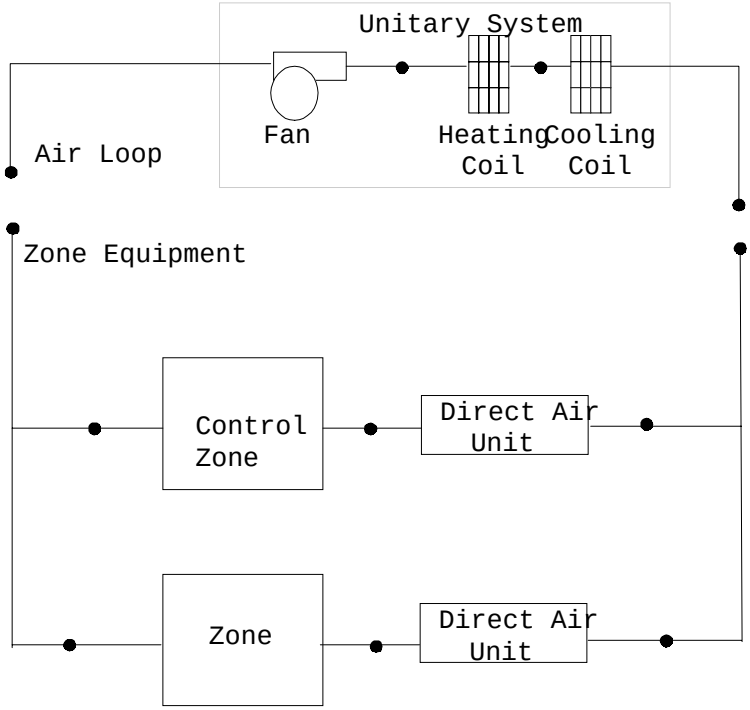

Figure 32. Schematic of EnergyPlus Heat/Cool Unitary System

Links to the fan, heating coil and DX cooling coil specifications are provided in the unitary system input data syntax. In addition the control zone name, the fraction of the total system air flow delivered to the control zone and system design operating conditions are specified by the unitary system syntax as shown in the Energy+.idd specification below.

```
UNITARYSYSTEM:BLOWTHRU:HEATCOOL,
   A1,  \field Name of unitary system
   A2,  \field Availability schedule
        \type object-list
        \object-list ScheduleNames
   A3,  \field Unitary system inlet node name
   A4,  \field Unitary system outlet node name
   A5,  \field Operating mode
        \type choice
        \key CycFanCycCoil
        \key ContFanCycCoil
   N1,  \field Unitary system heating capacity
        \note  Should match heating coil output
        \units W
   N2,  \field Maximum supply air temperature from unitary system heater
        \units C
```

```
N3,  \field Design air flow rate through the unitary system
     \note  Needs to match fan size
     \units m3/s
A6,  \field Controlling zone or thermostat location
N4,  \field Fraction of the total or design volume flow that goes through the controlling zone
     \minimum> 0
     \maximum 1
A7,  \field Supply fan type
     \note  Only works with ON/OFF Fan
A8,  \field Supply fan name
A9,  \field Fan outlet node
     \note  Needs to match in the fan object
A10, \field Heating coil type
     \note  Only works with gas and electric coils
A11, \field Heating coil name
A12, \field Cooling coil type
     \note  Only works with DX cooling coil
A13, \field Cooling coil name
A14; \field Cooling coil inlet node
     \note  Needs to match in the cooling coil object
```

Field: Name of unitary system

This alpha field contains the identifying name for the unitary system.

Field: Availability schedule

This alpha field contains the schedule name which contains information on the availability of the unitary system to operate.

Field: Unitary system inlet node name

This alpha field contains the unitary system inlet node name.

Field: Unitary system outlet node name

This alpha field contains the unitary system outlet node name.

Field: Operating Mode

This input field has two choices: CycFanCycCoil or ContFanCycCoil. The first choice stands for “cycling fan cycling coil”. This means that the supply air fan and the heating or cooling coil cycle on and off together to meet the heating or cooling load (a.k.a. AUTO fan). The second choice stands for “continuous fan cycling coil”. The supply fan runs continuously while the heating or cooling coil cycles to meet the load.

Field: Unitary system heating capacity

This numeric field contains the system heating capacity in Watts. This capacity should match the specified unitary system heating coil output.

Field: Maximum supply air temperature from unitary system heater

This numeric field contains the design operating air outlet temperature in degrees C when the unitary system is heating.

Field: Design air flow rate through the unitary system

This numeric field shows the design volumetric flow rate of the unitary system in cubic meters per second. This volumetric flow rate should match the flow rate specified for the unitary system fan.

Field: Controlling zone or thermostat location

This alpha field contains the identifying zone name where the thermostat controlling the unitary system is located.

Field: Fraction of the total or design volume flow that goes through the controlling zone

This numeric field contains the fraction (>0 to 1) of the total system volumetric flow rate that is supplied to the zone with the unitary system thermostat.

Field: Supply fan type

This alpha field contains the identifying type of fan specified in the unitary system. Fan type must be ON-OFF.

Field: Supply fan name

This alpha field contains the identifying name given to the unitary system fan.

Field: Fan outlet node

This alpha field contains the identifying name given to the unitary system fan Outlet Node, as specified in the fan object.

Field: Heating coil type

This alpha field contains the identifying type of heating coil specified in the unitary system. Heating coil type must be GAS or ELECTRIC.

Field: Heating coil name

This alpha field contains the identifying name given to the unitary system heating coil.

Field: Cooling coil type

This alpha field contains the identifying type of cooling coil specified in the unitary system. Cooling coil type must be DX.

Field: Cooling coil name

This alpha field contains the identifying name given to the unitary system cooling coil.

Field: Cooling coil inlet node

This alpha field contains the identifying name given to the system cooling coil inlet node, as specified in the cooling coil object.

As shown in the example below, correct specification of the heat/cool unitary system requires specification of the following objects in addition to the unitary system object:

1. ON-OFF fan
2. heating coil
3. cooling coil
4. direct air unit for each zone served by the unitary system

It should be noted that the volumetric air flow rate specified in the direct air unit for the controlling zone should properly reflect the fractional volumetric air flow rate specified in the unitary system object. In addition, the DX cooling coil operation mode must be specified consistently with the

unitary system operating mode (e.g., with CycFanCycCoil for Unitary System operating mode, the DX cooling coil operation mode must be CycFanCycComp).

```
UNITARYSYSTEM:BLOWTHRU:HEATCOOL, GasHeat DXAC Unitary System 1,   !Unitary system name
      FanAndCoilAvailSched,                                       !Availability schedule name
      Air Loop Inlet Node, Air Loop Outlet Node, !Unitary system inlet and outlet air nodes
      CycFanCycCoil,  ! Unitary system operating mode – must match DX coil operating mode
      25000,          !Unitary system heating capacity - should match heating coil output[W]
      80,             !Maximum supply air temperature from unitary system heater [C]
      1.3,            !Design air flow rate through the system [m^3/s] - Needs to match fan size
      East Zone,      !Controlling zone or thermostat location
      0.276923,       !Fraction of the volume flow that goes through the controlling zone
      FAN:SIMPLE:ONOFF, Supply Fan 1,   !Supply fan type and name
      Heating Coil Air Inlet Node,      !Fan outlet node and needs to match in the fan object
      COIL:GAS:HEATING, Unitary System Heating Coil 1, !Heating coil type and name
      COIL:DX:DOE2, Unitary System ACDXCoil 1, !Cooling coil type and name
      Cooling Coil Air Inlet Node; !Cooling coil inlet node, needs to match in cooling coil object

   COIL:GAS:HEATING,
      Unitary System Heating Coil 1, !Name of heating coil
      FanAndCoilAvailSched,          !Coil Schedule
      0.8 ,                          !Gas Burner Efficiency of the Coil
      25000,                         !Nominal Capacity of the Coil [W]
      Heating Coil Air Inlet Node, Cooling Coil Air Inlet Node; !Coil Air Side Inlet & Outlet Node

   COIL:DX:DOE2,
      Unitary System ACDXCoil 1,   !Name of cooling coil
      FanAndCoilAvailSched,        !Coil Schedule
      25000,                       !Rated total cooling capacity [W]
      0.75,                        !Rated sensible heat ratio
      3.0,                         !Rated COP
      1.3,                         !Rated air flow rate [m3/s]
      Cooling Coil Air Inlet Node, !Coil air inlet node
      Air Loop Outlet Node,        !Coil air outlet node
      WindACCoolCapFT,             !Cooling capacity modifier curve (temperature,C)
      WindACCoolCapFFF,            !Cooling capacity modifier curve (flow fraction)
      WindACEIRFT,                 !Energy input ratio modifier curve (temperature,C)
      WindACPLFFPLR,               !Energy input ratio modifier curve (flow fraction)
      CycFanCycComp,               !Operation mode (cycling fan, cycling compressor)

   FAN:SIMPLE:ONOFF,
      Supply Fan 1,         !Fan Name
      FanAndCoilAvailSched, !Fan Schedule
      0.7,                  !Fan Efficiency
      600.0,                !Delta Pressure [N/M^2]
      1.3,                  !Max Vol Flow Rate  [m^3/Sec]
      0.00,                 !Min Vol Flow Rate  [m^3/Sec]
      0.9,                  !motor efficiency
      1.0,                  !motor in air stream fraction
      Air Loop Inlet Node, Heating Coil Air Inlet Node;  !Inlet Node, Outlet Node
```

```
DIRECT AIR,
    Zone1DirectAir,
    FanAndCoilAvailSched,
    Zone 1 Inlet Node,
    0.47;

DIRECT AIR,
    Zone2DirectAir,
    FanAndCoilAvailSched,
    Zone 2 Inlet Node,
    0.36;

DIRECT AIR,
    Zone3DirectAir,
    FanAndCoilAvailSched,
    Zone 3 Inlet Node,
    0.47;
```

Example of Heat/Cool Unitary System Specification

UnitarySystem:BlowThru:HeatCool Outputs

```
HVAC,Average,Unitary System RunTime Fraction
```

Air Conditioner:Window:Cycling

The Window Air Conditioner is a unit of zone equipment made up of other components. Each window air conditioner consists of an outside air mixer, a fan, and a DX coil. These components are described elsewhere in this document. The input for a window air conditioner requires the names of these three pieces of equipment, which are then specified individually elsewhere in the input. The input for a window air conditioner also requires the name of an availability schedule, the maximum unit airflow rate, and the outside airflow rate for the unit. The unit is connected to a zone by specifying an air inlet node, which must be the same as a zone exhaust node; and an air outlet node, which must be the same as a zone inlet node. The unit is connected to the outside air by giving the names of an outlet air inlet node and an exhaust (relief) node. Finally an operation mode must be specified: the fan can run continuously with the DX coil cycling on/off to match the zone cooling demand; or the fan and DX coil can cycle on/off to meet the cooling demand.

Field: name of window AC unit

A unique user assigned name for an instance of a window air conditioner unit. Any reference to this window air conditioner by another object will use this name.

Field: availability schedule

The name of the schedule (ref: Schedule) that denotes whether the window air conditioner unit can run during a given hour. A schedule value of 1 indicates that the unit can be on during the hour. A value of 0 denotes that the unit must be off for the hour.

Field: maximum air flow rate

The maximum volumetric airflow rate through the window air conditioner in cubic meters per second. Since the unit operates by cycling on/off, this is also the design, rated airflow rate of the unit.

Field: maximum outside air flow rate

If the window air conditioner uses outside air, this field specifies the outside air volumetric flow rate in cubic meters per second. This flow rate should be less than or equal to the maximum airflow

rate. A value of zero specifies no outside air. Note that the outside airflow rate is fixed: it cannot change during the simulation

Field: air inlet node

The name of the HVAC system node (see Node) from which the window air conditioner draws its indoor air. This should be one of zone exhaust nodes for the zone which the window air conditioner is cooling.

Field: air outlet node

The name of the HVAC system node (see Node) to which the window air conditioner sends its outlet air. This should be one of the inlet air nodes of the zone which is being cooled.

Field: outside air node

The name of the HVAC system node (see Node) from which the window air conditioner draws its outside air. This should be the same node as the outside air node of the unit's outside air mixer.

Field: air relief node

The name of the HVAC system node (see Node) to which the window air conditioner exhausts its relief air. This should be the same node as the relief air node of the unit's outside air mixer.

Field: outside air mixer name

The name of an outside air mixer component which composes part of the window air conditioner unit. Note that some of the input for the outside air mixer will duplicate input fields of the window air conditioner. The outside air node of the outside air mixer should be the same as the outside air node of the window air conditioner. The relief air node of the outside air mixer should be the same as the relief air node of the window air conditioner. In addition, the return air node of the outside air mixer should be the same node as the air inlet node of the window air conditioner. In addition, the outside air mixer's mixed air node should be the same as the window air conditioner's fan's inlet air node (for blow through) or the air conditioner's DX coil's inlet node (for draw through)

Field: fan name

The name of a constant volume fan component that composes part of the window air conditioner. Note that the fan's maximum flow rate should be the same as the maximum airflow rate of the window air conditioner. The fan's inlet node should be the same as the outside air mixer's mixed air node (for blow through) or the DX coil's outlet node (for draw through). The fan's outlet node should be the same as the DX coil's air inlet node (for blow through) or the window air conditioner's air outlet node (for draw through).

Field: DX cooling coil name

The name of a DX cooling coil component that composes part of the window air conditioner unit. The DX coil air inlet node should be the same as the fan outlet node (for blow through) or the outside air mixer's mixed air node (for draw through). The DX coil air outlet node should be the same as the window air conditioner's air outlet node (for blow through) or the fan's inlet node (for draw through). The operation mode of the DX coil should be the same as the operation mode of the window air conditioner.

Field: operation mode

This input field has two choices: CycFanCycComp or ContFanCycComp. The first choice stands for "cycling fan cycling compressor". This means that the units unloads by cycling both the fan and compressor; that is, both the fan and the DX coil unit compressor cycle on and off together to meet

the load. The second choice stands for “continuous fan cycling compressor”. The fan runs continuously while the DX coil unit compressor cycles on and off to meet the load.

Field: fan placement

This input field has two choices: blow through or draw through. The first choice stands for “blow through fan”. This means that the unit consists of an outside air mixer followed by a fan followed by a DX coil. The fan “blows through” the DX coil. The second choice stands for “draw through fan”. This means that the unit consists of an outside air mixer followed by a DX coil followed by a fan. The fan “draws air through” the coil.

Below is the IDD specification of the cycling window air conditioner.

```
AIR CONDITIONER:WINDOW:CYCLING,
   A1, \field name of window AC unit
       \type alpha
   A2 , \field availability schedule
        \type object-list
        \object-list ScheduleNames
   N1 , \field maximum air flow rate
        \type real
        \units m3/s
   N2 , \field maximum outside air flow rate
        \type real
        \units m3/s
   A3 , \field air inlet node
        \type alpha
   A4 , \field air outlet node
        \type alpha
   A5 , \field outside air node
        \ type alpha
   A6 , \field air relief node
        \type alpha
   A7 , \field outside air mixer name
        \type alpha
   A8 , \field fan name
        \type alpha
   A9 , \field DX cooling coil name
        \type alpha
   A10, \field operation mode
        \type choice
        \key CycFanCycComp
        \key ContFanCycComp
        \note for CycFanCycComp, entire unit cycles on/off to meet the cooling load
        \note for ContFanCycComp, fan runs continuously while DX coil cycles on/off to meet load
   A11; \field fan placement
        \type choice
        \key blow through
        \key draw through
```

Following is an example input for the cycling window air conditioner, along with its constituent components.

```
AIR CONDITIONER:WINDOW:CYCLING,
       Zone3WindAC, !Name
       FanAndCoilAvailSched, ! on/off schedule
       0.637,                 ! air flow rate in m3/s
       0.05,                 ! outside air flow rate in m3/s
       Zone3WindACAirInletNode,  ! air inlet node to AC; also a zone exhaust node
       Zone3WindACAirOutletNode, ! air outlet node of AC; also a zone inlet node
       Zone3WindACOAInNode,  ! AC outside air inlet node
       Zone3WindACExhNode,   ! AC relief air node
       Zone3WindACOAMixer,   ! name of outside air mixer in AC
       Zone3WindACFan,       ! name of fan in AC
       Zone3WindACDXCoil,    ! name of DX coil in AC
       ContFanCycComp,       ! operation mode
       draw through;         ! fan placement


   OUTSIDE AIR MIXER,
       Zone3WindACOAMixer,           ! name
       Zone3WindACOAMixerOutletNode, ! mixer outlet node
       Zone3WindACOAInNode,          ! mixer OA node
       Zone3WindACExhNode,           ! mixer relief node
       Zone3WindACAirInletNode;      ! mixer inlet node

   FAN:SIMPLE:ConstVolume,
       Zone3WindACFan, ! name
       FanAndCoilAvailSched, ! fan on/off schedule
       0.5,                  ! total efficiency
       75.0,                 ! pressure rise in Pascals (typical fan coil value)
       0.637,                 ! flow rate in m3/s
       0.9,                  ! motor efficiency
       1.0,                  ! motor in air stream fraction
       Zone3WindACDXOutletNode,      ! fancoil fan inlet node
       Zone3WindACAirOutletNode;     ! fancoil fan outlet node

   COIL:DX:BF-Empirical,
       Zone3WindACDXCoil, ! name
       FanAndCoilAvailSched, ! coil on/off schedule
       10548,      ! rated total cooling capacity (3 tons)
       0.75,       ! rated sensible heat ratio
       3.0,        ! rated COP
       0.637,       ! rated air flow rate (m3/s)
       Zone3WindACOAMixerOutletNode, ! coil air inlet mode
       Zone3WindACDXOutletNode,      !coil air outlet node
       WindACCoolCapFT,          ! cooling cap modifier curve (temperature, C)
       WindACCoolCapFFF,         ! cooling cap modifier curve (flow fraction)
       WindACEIRFT,              ! energy input ratio modifier curve (temperature, C)
       WindACEIRFFF,             ! energy input ratio modifier curve (flow fraction)
       WindACPLFFPLR,            ! part load factor modifier curve (flow fraction)
       ContFanCycComp;           ! operation mode
```

Air Conditioner:Window:Cycling Outputs

```
HVAC,Average,Window AC Total Cooling Rate[W]
HVAC,Sum,Window AC Total Cooling Energy[J]
HVAC,Average,Window AC Sensible Cooling Rate[W]
HVAC,Sum,Window AC Sensible Cooling Energy[J]
HVAC,Average,Window AC Latent Cooling Rate[W]
HVAC,Sum,Window AC Latent Cooling Energy[J]
HVAC,Average,Window AC Electric Power[W]
HVAC,Sum,Window AC Electric Consumption[J]
HVAC,Average,Window AC Fan RunTime Fraction
HVAC,Average,Window AC Compressor RunTime Fraction
```

Field: Window AC Total Cooling Rate[W]

This field is the total (sensible and latent) heat extraction rate of the window air conditioner unit from the zone it is serving in Watts. This is determined by the outlet and zone conditions and the mass flow rate through the unit.

Field: Window AC Total Cooling Energy[J]

This is the total (sensible and latent) heat extraction of the window air conditioner unit from the zone it is serving in Joules over the time step being reported. This is determined by outlet and zone air conditions, the mass flow rate through the unit, and the time step.

Field: Window AC Sensible Cooling Rate[W]

This field reports the moist air sensible heat extraction rate of the window air conditioner unit from the zone it is serving in Watts. This is determined by the outlet and zone conditions and the mass flow rate through the unit.

Field: Window AC Sensible Cooling Energy[J]

This field reports the moist air sensible heat extraction of the window air conditioner unit from the zone it is serving in Joules over the time step being reported. This is determined by the outlet and zone conditions and the mass flow rate through the unit.

Field: Window AC Latent Cooling Rate[W]

This output is the latent heat extraction rate of the window air conditioner unit from the zone it is serving in Watts. This is determined by the outlet and zone conditions and the mass flow rate through the unit.

Field: Window AC Latent Cooling Energy[J]

This is the latent heat extraction of the window air conditioner unit from the zone it is serving in Joules over the time step being reported. This is determined by the outlet and zone conditions and the mass flow rate through the unit.

Field: Window AC Electric Power[W]

This output is the electricity consumption rate of the window air conditioner unit in Watts. The consumption includes electricity used by the compressor and the fan.

Field: Window AC Electric Consumption[J]

This output is the electricity consumption of the window air conditioner unit in Joules for the time period being reported. The consumption includes electricity used by the compressor and the fan.

Field: Window AC Fan RunTime Fraction

This is the fraction of the report time step during which the fan had cycled on.

Field: Window AC Compressor RunTime Fraction

This is the fraction of the report time step during which the DX unit compressor had cycled on.

DXSystem:AirLoop

The blow thru DX System is a “virtual” component that consists of DX cooling coil component as shown in the Figure below. The DX cooling coil specifications is provided in the input data syntax. This coil can be specified anywhere in the air loop simulation but will control the best with a blow through fan since the fan heat will be handled the most accurate.

This system does not need any plant specification and will provide the electric consumption necessary to operate the compressor and the condenser fan. The supply fan is simulated separately. This coil can be used with any system that a coil roughly meets a deck temperature and can be designed for use with all the terminal reheat, variable volume either single or multi duct systems. Any system where the deck temperature is met in the air loop and the trim control for the zone is met downstream.

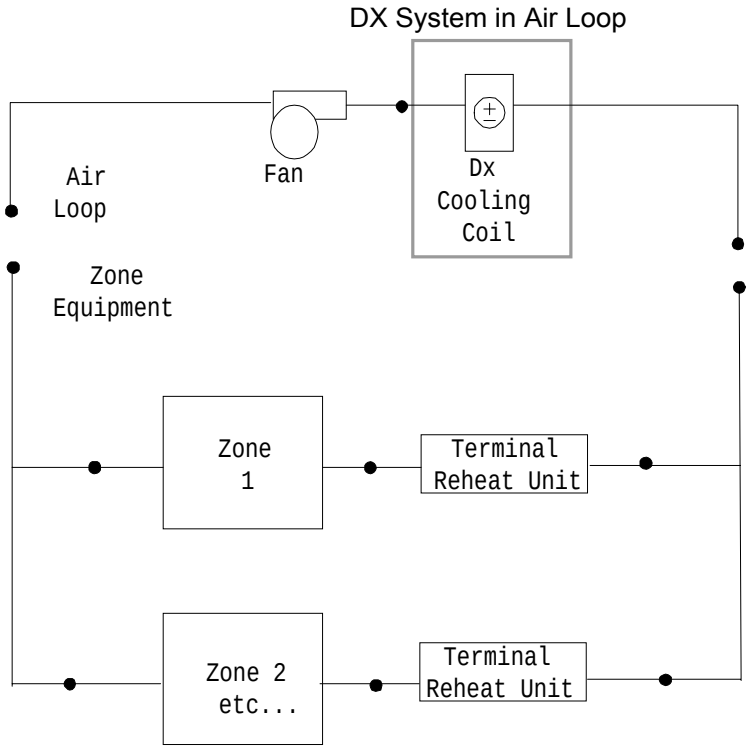

Figure 33. Schematic of EnergyPlus DX System in Air Loop

The IDD is shown below:

```
DXSystem:AirLoop,
   A1 , \field Name of DX Cooling Coil System
        \type alpha
   A2 , \field Availability schedule
        \type object-list
        \object-list ScheduleNames
   A3 , \field DX Cooling Coil System inlet node name
        \type alpha
   A4 , \field DX Cooling Coil System outlet node name
        \type alpha
   A5 , \field DX Cooling Coil System Control Node
        \type alpha
   A6,  \field Cooling coil type
        \note  Only works with DX cooling coil
   A7;  \field Cooling coil name
```

Field: Name of DX Cooling Coil System

This alpha field contains the identifying name for the DX System.

Field: Availability schedule

This alpha field contains the schedule name that contains information on the availability of the DX System to operate.

Field: DX Cooling coil System inlet node

This alpha field contains the identifying name given to the DX cooling coil inlet node, as specified in the DX cooling coil object.

Field: DX Cooling coil System outlet node

This alpha field contains the identifying name given to the DX cooling coil outlet node, as specified in the cooling coil object.

Field: DX Cooling coil system control node

This alpha field contains the identifying name given to the DX cooling coil control node, this is the node that the temperature set point is specified by the setpoint manager.

Field: Cooling coil type

This alpha field contains the identifying type of cooling coil specified in the DX system. Cooling coil type must be DX.

Field: Cooling coil name

This alpha field contains the identifying name given to the DX cooling coil.

As shown in the example below, correct specification of the furnace requires specification of the DX Cooling Coil object in addition to the HVACDXSystem object:

In addition, the DX cooling coil operation mode must be specified consistently with the DX system operating mode (e.g., the DX cooling coil operation mode must be ContFanCycComp).

An example IDF specification:

```
DXSystem:AirLoop,
   DX Cooling Coil System 1,  !Name of the DX System
   CoolingCoilAvailSched,
   Cooling Coil Air Inlet Node, Air Loop Outlet Node,
   Air Loop Outlet Node,     !Control node name
   COIL:DX:BF-Empirical, ACDXCoil 1;  !DX Cooling Coil type and Name

COIL:DX:BF-Empirical,
    ACDXCoil 1,        ! name
    CoolingCoilAvailSched,     ! coil on/off schedule
    25000,      ! rated total cooling capacity (3 tons)
    0.75,       ! rated sensible heat ratio
    3.0,        ! rated COP
    1.3,          ! rated air flow rate (m3/s)
    Cooling Coil Air Inlet Node, ! coil air inlet mode
    Air Loop Outlet Node, ! coil air outlet node
    WindACCoolCapFT,          ! cooling cap modifier curve (temperature, C)
    WindACCoolCapFFF,         ! cooling cap modifier curve (flow fraction)
    WindACEIRFT,              ! energy input ratio modifier curve (temperature, C)
    WindACEIRFFF,             ! energy input ratio modifier curve (flow fraction)
    WindACPLFFPLR,            ! part load factor modifier curve (flow fraction)
    ContFanCycComp;           ! operation mode
```

Example of DX System Specification

DXSystem:AirLoop Outputs

Group – Radiative Convective Units

Baseboard Heater:Water:Convective

The hot water baseboard heater is a component of zone equipment. The component is controlled to meet any remaining zone load not met by other equipment in the zone that have higher heating priority. The control is accomplished by throttling the hot water flow. Input resembles that for the simple heating coil: there is an availability schedule, an overall UA, and a maximum hot water mass flow rate. The unit is connected to a hot water loop (demand side) with an inlet and outlet node. Finally, there is the control offset, which is really the tolerance on how closely the baseboard outlet will meet the zone load. Of course, this tolerance is relative to the zone load. The input data dictionary definition of the unit is as follows.

Field: Baseboard Name

A unique user assigned name for an instance of a hot water baseboard heater unit. Any reference to this unit by another object will use this name.

Field: Available Schedule

The name of the schedule (ref: Schedule) that denotes whether the hot water baseboard heater unit can run during a given hour. A schedule value greater than 0 (usually 1 is used) indicates that the unit can be on during the hour. A value less than or equal to 0 (usually 0 is used) denotes that the unit must be off for the hour.

Field: Inlet_Node

The name of the hot water inlet node for the baseboard heater.

Field: Outlet_Node

The name of the hot water outlet node for the baseboard heater.

Field: UA

The overall heat transfer coefficient for the baseboard heater in watts per degree Celsius at design conditions. The UA is defined by the equation

$$q = UA \cdot (T_{water, in} - T_{air, in})$$

where q is the heat transferred from water to the air in watts; $T_{water, in}$ is the inlet water temperature in degrees C; and $T_{air, in}$ is the inlet air temperature in degrees C (in this case just the room air temperature).

Field: Max Water Mass Flow Rate

The maximum hot water mass flow rate in kilograms per second.

Field: Control Offset

The control tolerance for the unit heating output. The unit is controlled by matching the unit output to the zone demand. For hot water baseboards, the model must be numerically inverted to obtain a specified output. The control offset is the error tolerance used to terminate the numerical inversion procedure. Basically this is the fraction:

$$|(Q_{BB, out} - Q_{zone\ load})| / Q_{zone\ load}$$

```
BASEBOARD HEATER:Water:Convective,
  A1 , \field Baseboard Name
  A2 , \field Available Schedule
       \type object-list
       \object-list ScheduleNames
  A3 , \field Inlet_Node
  A4 , \field Outlet_Node
  N1 , \field UA
  N2 , \field Max Water Mass Flow Rate
  N3 ; \field Control Offset
```

An example IDF for the hot water convective baseboard is shown below.

```
BASEBOARD HEATER:Water:Convective,
        Zone3Baseboard, ! name
        FanAndCoilAvailSched, ! on/off schedule
        Zone 3 Reheat Water Inlet Node, ! water inlet node
        Zone 3 Reheat Water Outlet Node, ! water outlet node
        500.,    ! UA
        1.3,     ! maximum water mass flow rate
        0.001;   ! tolerance
```

Baseboard Heater Outputs

```
HVAC,Average,Baseboard Heating Rate[W]
HVAC,Sum,Baseboard Heating Energy[J]
Zone,Meter,Baseboard:EnergyTransfer [J]
```

Field: Baseboard Heating Rate[W]

This is the heat addition rate of the convective baseboard to the zone it is serving in Watts.

Field: Baseboard Heating Energy[J]

This is the heat addition of the convective baseboard to the zone it is serving in Joules over the time step being reported.

Field: Baseboard:EnergyTransfer [J]

This meter report variable is the sum of the baseboard heat output from all the baseboards in the HVAC systems in the simulation.

Low Temp Radiant System:Hydronic

The low temperature radiant system (hydronic) is a component of zone equipment that is intended to model any “radiant system” where water is used to supply/remove energy to/from a building surface (wall, ceiling, or floor). The component is controlled to meet any remaining zone load not met by other equipment in the zone that have higher priority. The control is accomplished by throttling the hot or chilled water flow to the unit. This model covers a wide range of low temperature radiant systems: heating and/or cooling, panel or embedded pipes, etc. It is not intended to simulate high temperature electric or gas radiant heaters. Those devices will be handled by a separate model and different input syntax. Low temperature radiant systems that use electric resistance heating should also be defined using separate input syntax (ref: Low Temp Radiant System:Electric). The input data dictionary definition of a hydronic low temperature radiant system is as follows.

Field: Name of hydronic low temperature radiant system

This field is an unique user assigned name for an instance of a hydronic low temperature radiant system. Any reference to this unit by another object will use this name.

Field: Availability schedule

This field is the name of the schedule (ref: Schedule) that denotes whether the hydronic low temperature radiant system can run during a given hour. A schedule value greater than 0 (usually 1 is used) indicates that the unit is available and can be on during the hour. A value less than or equal to 0 (usually 0 is used) denotes that the unit is not available and must be off for the hour.

Field: Zone name

This field is the name of the zone (Ref: Zone) in which the hydronic low temperature radiant system is principally located and intended to affect. A system that is between two zones will still act upon each zone; however, the zone name referenced here should be the zone that controls the radiant system response.

Field: Surface name

This field is the name of the surface (Ref: Surface) in which the hydronic tubing is embedded/contained. This specification attaches the source or sink from the radiant system to a particular surface and the contribution of the system to the heat balances of that surface.

Field: Hydronic tubing inside diameter

This field is the inside diameter of the tubes through which water is circulated for the system being defined by this statement. The inside diameter should be recorded in meters and is used to determine the convective heat transfer from the water to the inside surface of the hydronic tubing.

Field: Hydronic tubing length

This field is the total length of pipe embedded in the surface named above in the surface name field. The length of the tube should be entered in meters and is used to determine the effectiveness of heat transfer from the fluid being circulated through the tubes and the tube/surface. Longer tubing lengths result in more heat will be transferred to/from the radiant surface to the circulating fluid.

Field: Temperature control type

This field specifies along with the throttling range and setpoint schedules how the user wishes to control the hydronic radiant system. The temperature denoted in the setpoint schedule can refer to one of three different temperatures: a mean air temperature, a mean radiant temperature, or an operative temperature. The choice of temperature is controlled by the current field—temperature control type. The user must select from the following options: MAT, MRT, or OPERATIVE. If the user does not select a control type, MAT control is assumed by EnergyPlus. See the throttling range and control temperature schedule fields below for more information.

Field: Maximum hot water flow

This field is the maximum flow rate of hot water through the radiant system in kg/s. The controls for the radiant system will vary the flow rate of hot water through the surface using zero flow and the maximum flow rate specified in this field as the lower and upper bounds, respectively.

Field: Heating water inlet node

This field contains the name of the hot water inlet node to the radiant system. Note that this node name must also show up in the branch description when defining the plant demand side network in a manner identical to defining a heating coil.

Field: Heating water outlet node

This field contains the name of the hot water oulet node to the radiant system. Note that this node name must also show up in the branch description when defining the plant demand side network in a manner identical to defining a heating coil.

Field: Heating control throttling range

This field specifies the range of temperature in degrees Celsuis over which the radiant system throttles from zero flow rate up to the maximum defined by the maximum hot water flow rate field described above. The throttling range parameter is used in conjunction with the control temperature to define the response of the system to various zone conditions. The heating control temperature schedule specifies the "setpoint" temperature where the flow rate to the system is at half of the maximum flow rate. For example, if the heating control temperature setpoint is currently 15°C and the heating throttling range is 2°C, the water flow rate to the radiant system will be zero when the controlling temperature (MAT, MRT, or Operative Temperature; see control type field above) is at or above 16°C and the maximum flow rate when the controlling temperature is at or below 14°C. This represents a throttling range of 2°C around the setpoint of 15°C. In between 14°C and 16°C, the flow rate to the radiant system is varied linearly.

Field: Heating control temperature schedule

This field specifies the heating setpoint or control temperature for the radiant system in degrees Celsius. Used in conjunction with the previous field (heating control throttling range), it will define whether or not the system is running and the current flow rate. Water flow rate to the system is varied linearly around the setpoint temperature based on the throttling range and the maximum heating flow rate parameters (see above). It should be noted that this control schedule will allow different setpoint temperatures throughout the year for heating. In addition, this schedule may be different that the thermostatic control schedule defined for overall operation of components serving the zone in which the radiant system is located. The thermostatic control determines whether or not there is a heating or cooling load in the space and thus whether the systems should be operating. This field simply controls the flow rate to the radiant system.

Field: Maximum cold water flow

This field is the maximum flow rate of cold water through the radiant system in kg/s. The controls for the radiant system will vary the flow rate of cold water through the surface using zero flow and the maximum flow rate specified in this field as the lower and upper bounds, respectively. Note that this field is optional and not required for a heating only system.

Field: Cooling water inlet node

This field contains the name of the cold water inlet node to the radiant system. Note that this node name must also show up in the branch description when defining the plant demand side network in a manner identical to defining a cooling coil. As with the maximum cold water flow rate, this field is optional and not required for a heating only system.

Field: Cooling water outlet node

This field contains the name of the cold water oulet node to the radiant system. Note that this node name must also show up in the branch description when defining the plant demand side network in a manner identical to defining a cooling coil. As with the maximum cold water flow rate, this field is optional and not required for a heating only system.

Field: Cooling control throttling range

This field specifies the range of temperature in degrees Celsuis over which the radiant system throttles from zero flow rate up to the maximum defined by the maximum cold water flow rate field

described above. The throttling range parameter is used in conjunction with the control temperature to define the response of the system to various zone conditions. The cooling control temperature schedule specifies the "setpoint" temperature where the flow rate to the system is at half of the maximum flow rate. For example, if the cooling control temperature setpoint is currently 25°C and the cooling throttling range is 2°C, the water flow rate to the radiant system will be zero when the controlling temperature (MAT, MRT, or Operative Temperature; see control type field above) is at or below 24°C and the maximum flow rate when the controlling temperature is at or above 26°C. This represents a throttling range of 2°C around the setpoint of 25°C. In between 24°C and 26°C, the flow rate to the radiant system is varied linearly.

Field: Cooling control temperature schedule

This field specifies the cooling setpoint or control temperature for the radiant system in degrees Celsius. Used in conjunction with the previous field (cooling control throttling range), it will define whether or not the system is running and the current flow rate. Water flow rate to the system is varied linearly around the setpoint temperature based on the throttling range and the maximum cooling flow rate parameters (see above). It should be noted that this control schedule will allow different setpoint temperatures throughout the year for cooling. In addition, this schedule may be different that the thermostatic control schedule defined for overall operation of components serving the zone in which the radiant system is located. The thermostatic control determines whether or not there is a heating or cooling load in the space and thus whether the systems should be operating. This field simply controls the flow rate to the radiant system.

```
LOW TEMP RADIANT SYSTEM:HYDRONIC,
   A1 , \field name of hydronic low temperature radiant system
   A2 , \field availability schedule
        \type object-list
        \object-list ScheduleNames
   A3 , \field Zone name (name of zone system is serving)
        \type object-list
        \object-list ZoneNames
   A4 , \field Surface name (name of surface system is embedded in)
        \type object-list
        \object-list SurfaceNames
   N1 , \field Hydronic tubing inside diameter
        \units m
        \minimum> 0
   N2 , \field Hydronic tubing length (total length of pipe embedded in surface)
        \units m
        \minimum> 0
   A5 , \field temperature control type (temperature on which unit is controlled)
        \type choice
        \key MAT
        \key MRT
        \key OPERATIVE
        \default MAT
   N3 , \field maximum hot water flow
        \units kg/s
        \minimum 0
   A6 , \field heating water inlet node
   A7 , \field heating water outlet node
   N4 , \field heating control throttling range
        \units degrees C
        \minimum 0
   A8 , \field heating control temperature schedule
        \type object-list
        \object-list ScheduleNames
   N5 , \field maximum cold water flow
        \units kg/s
        \minimum 0
   A9 , \field cooling water inlet node
   A10, \field cooling water outlet node
   N6 , \field cooling control throttling range
        \units degrees C
        \minimum 0
   A11; \field cooling control temperature schedule
        \type object-list
        \object-list ScheduleNames
```

An example IDF with a hydronic low temperature radiant system is shown below.

```
LOW TEMP RADIANT SYSTEM:HYDRONIC,
   Resistive Zone Radiant Floor, ! name of hydronic low temperature radiant system
   RadiantSysAvailSched,       ! availability schedule
   Resistive Zone,             ! Zone name (name of zone system is serving)
   Zn001:Flr001,               ! Surface name (name of surface system is embedded in)
   0.012,                      ! Hydronic tubing inside diameter in meters
   400.0,                      ! Hydronic tubing length (total length of pipe embedded in surf) in meters
   MAT,                        ! control type (control on mean air temperature)
   0.08,                       ! maximum hot water flow in kg/s
   Resistive Zone Radiant Water Inlet Node,  ! heating water inlet node
   Resistive Zone Radiant Water Outlet Node, ! heating water outlet node
   2.0 ,                       ! heating throttling range in degrees Celsius
   Radiant Heating Setpoints,  ! heating setpoint temperature schedule
   1.2 ,                       ! maximum cold water flow
   Zone 1 Cooling Water Inlet Node,  ! cooling water inlet node
   Zone 1 Cooling Water Outlet Node, ! cooling water outlet node
   2.0 ,                       ! cooling throttling range in degrees Celsius
   Radiant Cooling Setpoints ; ! cooling setpoint temperature schedule
```

Hydronic Low Temperature Radiant System Outputs

```
HVAC,Average,Hydronic Low Temp Radiant Heating Rate[W]
HVAC,Sum,Hydronic Low Temp Radiant Heating Energy[J]
```

```
HVAC,Average,Hydronic Low Temp Radiant Cooling Rate[W]
HVAC,Sum,Hydronic Low Temp Radiant Cooling Energy[J]
HVAC,Average,Hydronic Low Temp Radiant Water Mass Flow[kg/s]
HVAC,Average,Hydronic Low Temp Radiant Water Inlet Temp[C]
HVAC,Average,Hydronic Low Temp Radiant Water Outlet Temp[C]
```

Field: Hydronic Low Temp Radiant Heating Rate[W]

This field reports the heating input rate to the low temperature radiant system in Watts. This is the heat source to the surface that is defined as the radiant system. The heating rate is determined by the zone conditions and the control scheme defined in the user input.

Field: Hydronic Low Temp Radiant Heating Energy[J]

This field reports the heating input to the low temperature radiant system in Joules. This is the heat source to the surface that is defined as the radiant system. The heating rate is determined by the zone conditions, the control scheme defined in the user input, and the time step.

Field: Hydronic Low Temp Radiant Cooling Rate[W]

This field reports the cooling input rate to the low temperature radiant system in Watts. This is the heat sink to the surface that is defined as the radiant system. The cooling rate is determined by the zone conditions and the control scheme defined in the user input.

Field: Hydronic Low Temp Radiant Cooling Energy[J]

This field reports the cooling input to the low temperature radiant system in Joules. This is the heat sink to the surface that is defined as the radiant system. The cooling rate is determined by the zone conditions, the control scheme defined in the user input, and the time step.

Field: Hydronic Low Temp Radiant Water Mass Flow Rate[kg/s]

This field reports the mass flow rate of water through the low temperature radiant system in kilograms per second.

Field: Hydronic Low Temp Radiant Water Inlet Temp[C]

This field reports the temperature of water entering the low temperature radiant system in Celsius.

Field: Hydronic Low Temp Radiant Water Outlet Temp[C]

This field reports the temperature of water leaving the low temperature radiant system in Celsius.

Low Temp Radiant System:Electric

The low temperature radiant system (electric) is a component of zone equipment that is intended to model any “radiant system” where electric resistance heating is used to supply energy (heat) to a building surface (wall, ceiling, or floor). The component is controlled to meet any remaining zone heating load not met by other equipment in the zone that have higher heating priority. The control is accomplished by varying the electrical power supplied to the unit. This model covers either a radiant panel system or wires embedded in entire walls, floors, or ceilings. It is not intended to simulate high temperature electric or gas radiant heaters. Those devices will be handled by a separate model and different input syntax. Low temperature radiant systems that use water flowing through tubes to provide heat to the system should also be defined using separate input syntax (ref: Low Temp Radiant System:Hydronic). The input data dictionary definition of an electric low temperature radiant system is as follows.

Field: Name of electric resistance low temperature radiant system

This field is an unique user assigned name for an instance of an electric low temperature radiant system. Any reference to this unit by another object will use this name.

Field: Availability schedule

This field is the name of the schedule (ref: Schedule) that denotes whether the electric low temperature radiant system can operate during a given hour. A schedule value greater than 0 (usually 1 is used) indicates that the unit is available and can be on during the hour. A value less than or equal to 0 (usually 0 is used) denotes that the unit is not available and must be off for the hour.

Field: Zone name

This field is the name of the zone (Ref: Zone) in which the electric low temperature radiant system is principally located and intended to affect. A system that is between two zones will still act upon each zone; however, the zone name referenced here should be the zone that controls the radiant system response.

Field: Surface name

This field is the name of the surface (Ref: Surface) in which the electric resistance wire is embedded/contained. This specification attaches the heat source from the radiant system to a particular surface and the contribution of the system to the heat balances of that surface.

Field: Maximum electrical power to panel

This field is the maximum amount of electrical energy that can be converted to heat in this particular radiant system in Watts. The controls for the radiant system will vary the amount of power supplied to the surface between zero input and the maximum power specified in this field as the lower and upper bounds, respectively.

Field: Temperature control type

This field specifies along with the throttling range and setpoint schedules how the user wishes to control the low temperature electric radiant system. The temperature denoted in the setpoint schedule can refer to one of three different temperatures: a mean air temperature, a mean radiant temperature, or an operative temperature. The choice of temperature is controlled by the current field—temperature control type. The user must select from the following options: MAT, MRT, or OPERATIVE. If the user does not select a control type, MAT control is assumed by EnergyPlus. See the throttling range and control temperature schedule fields below for more information.

Field: Heating throttling range

This field specifies the range of temperature in degrees Celsuis over which the radiant system throttles from zero heat input via the electric resistance wires up to the maximum defined by the maximum electrical power field described above. The throttling range parameter is used in conjunction with the control temperature (see below) to define the response of the system to various zone conditions. The heating control temperature schedule specifies the “setpoint” temperature where the power input to the system is at half of the maximum power input. For example, if the heating control temperature setpoint is currently 15°C and the heating throttling range is 2°C, the electrical power supplied to the radiant system will be zero when the controlling temperature (MAT, MRT, or Operative Temperature; see control type field above) is at or above 16°C and the maximum power input when the controlling temperature is at or below 14°C. This represents a throttling range of 2°C around the setpoint of 15°C. In between 14°C and 16°C, the power input to the radiant system is varied linearly.

Field: Heating setpoint temperature schedule

This field specifies the heating setpoint or control temperature for the radiant system in degrees Celsius. Used in conjunction with the previous field (heating throttling range), it will define whether or not the system is running and the current power input to the radiant surface. Power input to the system is varied linearly around the setpoint temperature based on the throttling range and the maximum electrical power parameters (see above). It should be noted that this control schedule will allow different setpoint temperatures throughout the year for heating. In addition, this schedule may be different that the thermostatic control schedule defined for overall operation of components serving the zone in which the radiant system is located. The thermostatic control determines whether or not there is a heating or cooling load in the space and thus whether the systems should be operating. This field simply controls the flow rate to the radiant system.

```
LOW TEMP RADIANT SYSTEM:ELECTRIC,
   A1 , \field name of electric resistance low temperature radiant system
   A2 , \field availability schedule
        \type object-list
        \object-list ScheduleNames
   A3 , \field Zone name (name of zone system is serving)
        \type object-list
        \object-list ZoneNames
   A4 , \field Surface name (name of surface system is embedded in)
        \type object-list
        \object-list SurfaceNames
   N1 , \field maximum electrical power to panel
        \units W
        \minimum 0
   A5 , \field temperature control type (temperature on which unit is controlled)
        \type choice
        \key MAT
        \key MRT
        \key OPERATIVE
        \default MAT
   N2 , \field heating throttling range
        \minimum 0
   A6 ; \field heating setpoint temperature schedule
        \type object-list
        \object-list ScheduleNames
```

An example IDF with an electric low temperature radiant system is shown below.

```
    LOW TEMP RADIANT SYSTEM:ELECTRIC, Zone 2 Radiant Floor,
         RadiantPanelAvailSched ,    ! Availability schedule
         EAST ZONE ,                 ! Zone name (name of zone system is serving)
         Zn002:Flr001 ,              ! Surface name (name of surface system is embedded in)
         10000 ,                     ! maximum electrical power to panel (in Watts)
         MAT,                        ! control type (control on mean air temperature)
         2.0 ,                       ! heating throttling range (in C)
         Radiant Heating Setpoints ; ! heating setpoint temperatures
```

Electric Low Temperature Radiant System Outputs

```
HVAC,Average, Electric Low Temp Radiant Electric Power[W]
HVAC,Sum, Electric Low Temp Radiant Electric Consumption[J]
```

Field: Electric Low Temp Radiant Electric Power[W]

This field reports the rate at which electric energy is “burned” in the low temperature radiant system in Watts. This is the heat source to the surface that is defined as the radiant system. The heating rate is determined by the zone conditions and the control scheme defined in the user input.

Field: Electric Low Temp Radiant Electric Consumption[J]

This field reports the amount of electric energy “burned” in the low temperature radiant system in Joules. This is the heat source to the surface that is defined as the radiant system. The heating

rate is determined by the zone conditions, the control scheme defined in the user input, and the time step.

High Temp Radiant System

The high temperature radiant system (gas-fired or electric) is a component of zone equipment that is intended to model any "high temperature" or "high intensity" radiant system where electric resistance or gas-fired combustion heating is used to supply energy (heat) to a building occupants directly as well as the building surfaces (wall, ceiling, or floor). The component is controlled to meet any remaining zone heating load not met by other equipment in the zone that have higher heating priority. The control is accomplished by varying the electrical power supplied to or gas consumed by the unit. It is not intended to simulate low temperature electric or hydronic radiant systems. Those devices will be handled by a separate model and different input syntax (ref: Low Temp Radiant System:Hydronic and Low Temp Radiant System:Electric). The input data dictionary definition of a high temperature radiant system is as follows.

Field: Name of high temperature radiant system

This field is an unique user assigned name for an instance of the high temperature radiant system. Any reference to this unit by another object will use this name.

Field: Availability schedule

This field is the name of the schedule (ref: Schedule) that denotes whether the high temperature radiant system can operate during a given hour. A schedule value greater than 0 (usually 1 is used) indicates that the unit is available and can be on during the hour. A value less than or equal to 0 (usually 0 is used) denotes that the unit is not available and must be off for the hour.

Field: Zone name

This field is the name of the zone (Ref: Zone) in which the high temperature radiant system is principally located and intended to affect.

Field: Maximum input power

This field is the maximum amount of energy (rate) that can be converted to heat in this particular radiant system in Watts. The controls for the radiant system will vary the amount of power supplied to the surface between zero input and the maximum power specified in this field as the lower and upper bounds, respectively.

Field: Type of high temperature radiant heater

This field denotes the type of high temperature radiant heater: gas or electric. The user must specify this by inputting either the keyword "GAS" or "ELECTRIC" for this field.

Field: Combustion efficiency

This field is the combustion efficiency for a gas high temperature radiant heater. This value should be greater than 0 and less than or equal to 1. It is intended to take into account any potential inefficiencies in the combustion process inside the radiant heater. The heater gas consumption is the ratio of heater output over the combustion efficiency. This parameter has no meaning for an electric high temperature radiant heater and is ignored when the previous field is equal to "ELECTRIC".

Field: Fraction radiant

This field specifies what fraction of the power input to the high temperature radiant heater is actually radiant heat transfer. The fraction should be between 0 and 1. In conjunction with the next

two parameters, it defines the breakdown of how the power input to the heater is distributed to the rest of the zone. The sum of these fractions must be less than or equal to 1. If the fractions are less than one, the remaining energy is added to the zone as convective heat transfer. The radiant heat transfer from the heat is distributed to people and surfaces using the distribution fractions listed below.

Field: Fraction latent

This field specifies the fraction of the power input to the high temperature radiant heater that is converted to a latent heat gain within the space. This may be appropriate when a combustion process produces moisture that is transferred into the space. The latent heat addition from a high temperature radiant heater is handled as any other latent heat gain within the space, affecting the moisture balance on the zone air.

Field: Fraction lost

This field specifies the fraction of power input to the high temperature radiant heater that is "lost". This energy is a loss term, and this fraction of the input power has no effect on the zone heat balances.

Field: Temperature control type

This field specifies along with the throttling range and setpoint schedules how the user wishes to control the high temperature radiant system. The temperature denoted in the setpoint schedule can refer to one of three different temperatures: a mean air temperature, a mean radiant temperature, or an operative temperature. The choice of temperature is controlled by the current field—temperature control type. The user must select from the following options: MAT, MRT, or OPERATIVE. If the user does not select a control type, OPERATIVE control is assumed by EnergyPlus. See the throttling range and control temperature schedule fields below for more information.

Field: Heating throttling range

This field specifies the range of temperature in degrees Celsuis over which the radiant system throttles from zero heat input via the electric resistance wires up to the maximum defined by the maximum electrical power field described above. The throttling range parameter is used in conjunction with the control temperature (see below) to define the response of the system to various zone conditions. The heating control temperature schedule specifies the "setpoint" temperature where the power input to the system is at half of the maximum power input. For example, if the heating control temperature setpoint is currently 15°C and the heating throttling range is 2°C, the electrical power supplied to the radiant system will be zero when the controlling temperature (MAT, MRT, or Operative Temperature; see control type field above) is at or above 16°C and the maximum power input when the controlling temperature is at or below 14°C. This represents a throttling range of 2°C around the setpoint of 15°C. In between 14°C and 16°C, the power input to the radiant system is varied linearly.

Field: Heating setpoint temperature schedule

This field specifies the heating setpoint or control temperature for the radiant system in degrees Celsius. Used in conjunction with the previous field (heating throttling range), it will define whether or not the system is running and the current power input to the radiant surface. Power input to the system is varied linearly around the setpoint temperature based on the throttling range and the maximum electrical power parameters (see above). It should be noted that this control schedule will allow different setpoint temperatures throughout the year for heating. In addition, this schedule may be different that the thermostatic control schedule defined for overall operation of components serving the zone in which the radiant system is located. The thermostatic control determines whether or not there is a heating or cooling load in the space and thus whether the systems should be operating. This field simply controls the flow rate to the radiant system.

Field: Fraction of radiant energy incident on people

This field specifies the fraction of radiant heat transfer to the zone from the radiant heater that is incident directly on people within the space. This has an impact on the predicted thermal comfort of the zone occupants. Note that since the thermal comfort models only use the results of the zone heat balances this energy is accounted for within the heat balance as convective energy, directly affecting the zone air heat balance. The basic assumption here is that most radiant energy falling on people will most likely be convected to the surroundings. This is a simplification of reality, but it maintains the overall energy balance.

Field: Surface to which radiant energy from heater is distributed

This field is the name of the first surface to which radiant heat transfer from the high temperature radiant heater is distributed. Used in conjunction with the next field, it helps to define the distribution of the radiant energy on the surfaces within the zone. Note that up to 20 pairs of surface names and corresponding fractions may be entered for a single radiant heater system.

Field: Fraction of radiant energy from heater distributed to surface

This field is paired with the preceding surface name (previous field) to define the fraction of radiant heat transfer leaving the high temperature radiant system that is incident on a particular surface. Users should take into account the directionality of high temperature radiant heaters and their location when defining the value for this input field. Note that the sum of all fractions plus the fraction of radiant energy incident on people must add up to less than or equal to 1.

```
HIGH TEMP RADIANT SYSTEM,
   A1 , \field name of high temperature radiant system
   A2 , \field availability schedule
        \type object-list
        \object-list ScheduleNames
   A3 , \field Zone name (name of zone system is serving)
        \type object-list
        \object-list ZoneNames
   N1 , \field maximum power input
        \units W
        \minimum 0
   A4 , \field type of high temperature radiant heater (gas or electric)
        \type choice
        \key GAS
        \key ELECTRIC
   N2 , \field combustion efficiency (ignore for non-gas radiant heaters)
        \minimum 0
        \maximum 1
   N3 , \field fraction of input converted to radiant energy
        \note N3, N4, and N5 must sum to 1 or less; remainder is considered convective heat
        \minimum 0
        \maximum 1
   N4 , \field fraction of input converted to latent energy
        \minimum 0
        \maximum 1
   N5 , \field fraction of input that is lost (vented to outside environment)
        \minimum 0
        \maximum 1
   A5 , \field temperature control type (temperature on which unit is controlled)
        \type choice
        \key MAT
        \key MRT
        \key OPERATIVE
        \default OPERATIVE
   N6 , \field heating throttling range
        \units degrees C
        \minimum 0
   A6 , \field heating setpoint temperature schedule
        \note this setpoint is an "operative temperature" setpoint
        \type object-list
        \object-list ScheduleNames
   N7,  \field fraction of radiant energy incident on people
        \note this will affect thermal comfort but from an energy balance standpoint this value
        \note gets added to the convective gains from the radiant heater
        \minimum 0
        \maximum 1
   A7,  \field surface to which radiant energy from heater is distributed 1
        \type object-list
        \object-list SurfaceNames
   N8,  \field fraction of radiant energy from heater distributed to surface 1
        \minimum 0
        \maximum 1
   A8,  \field surface to which radiant energy from heater is distributed 2
        \type object-list
        \object-list SurfaceNames
   N9,  \field fraction of radiant energy from heater distributed to surface 2
        \minimum 0
        \maximum 1
   A9,  \field surface to which radiant energy from heater is distributed 3
        \type object-list
        \object-list SurfaceNames
   N10, \field fraction of radiant energy from heater distributed to surface 3
        \minimum 0
        \maximum 1
   A10, \field surface to which radiant energy from heater is distributed 4
        \type object-list
        \object-list SurfaceNames
   N11, \field fraction of radiant energy from heater distributed to surface 4
        \minimum 0
        \maximum 1
   A11, \field surface to which radiant energy from heater is distributed 5
```

```
      \type object-list
      \object-list SurfaceNames
N12, \field fraction of radiant energy from heater distributed to surface 5
      \minimum 0
      \maximum 1
A12, \field surface to which radiant energy from heater is distributed 6
      \type object-list
      \object-list SurfaceNames
N13, \field fraction of radiant energy from heater distributed to surface 6
      \minimum 0
      \maximum 1
A13, \field surface to which radiant energy from heater is distributed 7
      \type object-list
      \object-list SurfaceNames
N14, \field fraction of radiant energy from heater distributed to surface 7
      \minimum 0
      \maximum 1
A14, \field surface to which radiant energy from heater is distributed 8
      \type object-list
      \object-list SurfaceNames
N15, \field fraction of radiant energy from heater distributed to surface 8
      \minimum 0
      \maximum 1
A15, \field surface to which radiant energy from heater is distributed 9
      \type object-list
      \object-list SurfaceNames
N16, \field fraction of radiant energy from heater distributed to surface 9
      \minimum 0
      \maximum 1
A16, \field surface to which radiant energy from heater is distributed 10
      \type object-list
      \object-list SurfaceNames
N17, \field fraction of radiant energy from heater distributed to surface 10
      \minimum 0
      \maximum 1
A17, \field surface to which radiant energy from heater is distributed 11
      \type object-list
      \object-list SurfaceNames
N18, \field fraction of radiant energy from heater distributed to surface 11
      \minimum 0
      \maximum 1
A18, \field surface to which radiant energy from heater is distributed 12
      \type object-list
      \object-list SurfaceNames
N19, \field fraction of radiant energy from heater distributed to surface 12
      \minimum 0
      \maximum 1
A19, \field surface to which radiant energy from heater is distributed 13
      \type object-list
      \object-list SurfaceNames
N20, \field fraction of radiant energy from heater distributed to surface 13
      \minimum 0
      \maximum 1
A20, \field surface to which radiant energy from heater is distributed 14
      \type object-list
      \object-list SurfaceNames
N21, \field fraction of radiant energy from heater distributed to surface 14
      \minimum 0
      \maximum 1
A21, \field surface to which radiant energy from heater is distributed 15
      \type object-list
      \object-list SurfaceNames
N22, \field fraction of radiant energy from heater distributed to surface 15
      \minimum 0
      \maximum 1
A22, \field surface to which radiant energy from heater is distributed 16
      \type object-list
      \object-list SurfaceNames
N23, \field fraction of radiant energy from heater distributed to surface 16
      \minimum 0
      \maximum 1
```

```
A23, \field surface to which radiant energy from heater is distributed 17
     \type object-list
     \object-list SurfaceNames
N24, \field fraction of radiant energy from heater distributed to surface 17
     \minimum 0
     \maximum 1
A24, \field surface to which radiant energy from heater is distributed 18
     \type object-list
     \object-list SurfaceNames
N25, \field fraction of radiant energy from heater distributed to surface 18
     \minimum 0
     \maximum 1
A25, \field surface to which radiant energy from heater is distributed 19
     \type object-list
     \object-list SurfaceNames
N26, \field fraction of radiant energy from heater distributed to surface 19
     \minimum 0
     \maximum 1
A26, \field surface to which radiant energy from heater is distributed 20
     \type object-list
     \object-list SurfaceNames
N27; \field fraction of radiant energy from heater distributed to surface 20
     \minimum 0
     \maximum 1
```

An example IDF with a high temperature radiant system is shown below.

```
HIGH TEMP RADIANT SYSTEM, Zone 2 Radiant Heater,
     RadiantPanelAvailSched ,   ! Availability schedule
     EAST ZONE ,                ! Zone name (name of zone system is serving)
     10000 ,                    ! maximum power input (in Watts)
     GAS,                       ! type of heater (either gas or electric)
     0.8,                       ! combustion efficiency (ignored for electric radiant heaters)
     0.80,                      ! fraction radiant
     0.00,                      ! fraction latent
     0.00,                      ! fraction lost
     OPERATIVE,                 ! temperature control type (controls on operative temperature)
     2.0 ,                      ! heating throttling range (in C)
     Radiant Heating Setpoints, ! heating setpoint temperatures
     0.04,                      ! fraction of radiant energy that is incident directly on people
     Zn002:Flr001, 0.80,        ! fraction of radiant energy that is incident on the surface indicated
     Zn002:Wall001, 0.04,       ! fraction of radiant energy that is incident on the surface indicated
     Zn002:Wall002, 0.04,       ! fraction of radiant energy that is incident on the surface indicated
     Zn002:Wall003, 0.04,       ! fraction of radiant energy that is incident on the surface indicated
     Zn002:Wall004, 0.04;       ! fraction of radiant energy that is incident on the surface indicated
```

High Temperature Radiant System Outputs

```
HVAC,Average, High Temperature Radiant Heating Rate[W]
HVAC,Sum, High Temperature Radiant Heating Energy[J]
HVAC,Average, High Temperature Radiant Gas Consumption Rate[W]
HVAC,Sum, High Temperature Radiant Gas Consumption[J]
HVAC,Average, High Temperature Radiant Electric Power[W]
HVAC,Sum, High Temperature Radiant Electric Consumption [J]
```

Field: High Temperature Radiant Heating Rate[W]

This field reports the rate at which energy is transferred from the high temperature radiant system to the zone in Watts. This rate is determined by the zone conditions and the control scheme defined in the user input. Note that this amount takes into account any combustion inefficiency and thus could be different that the gas consumption rate in a high temperature gas radiant system.

Field: High Temperature Radiant Heating Energy[J]

This field reports the amount of energy transferred from the high temperature gas radiant system to the zone in Joules. This amount is determined by the zone conditions, the control scheme defined in the user input, and the time step. Note that this amount takes into account any combustion

inefficiency and thus could be different that the gas consumption in a high temperature gas radiant system.

Field: High Temperature Radiant Gas Consumption Rate[W]

This field reports the rate at which gas is "burned" in a high temperature gas radiant system in Watts. This rate is determined by the zone conditions and the control scheme defined in the user input.

Field: High Temperature Radiant Gas Consumption[J]

This field reports the amount of gas "burned" in a high temperature gas radiant system in Joules. This amount is determined by the zone conditions, the control scheme defined in the user input, and the time step.

Field: High Temperature Radiant Electric Power[W]

This field reports the rate at which electric energy is "burned" in a high temperature electric radiant system in Watts. This rate is determined by the zone conditions and the control scheme defined in the user input.

Field: High Temperature Radiant Electric Consumption[J]

This field reports the amount of electric energy "burned" in a high temperature electric radiant system in Joules. This amount is determined by the zone conditions, the control scheme defined in the user input, and the time step.

Group – Set Point Managers

Set Point managers are the high-level control constructs in EnergyPlus. A Set Point Manager is able to access data from any of the HVAC system nodes and use this data to calculate a set point (usually a temperature set point) for one or more other HVAC system nodes. Set points are then used by Controllers as a goal for their control actions.

Set point managers are executed at the start of each HVAC time step, and they reside outside the HVAC system iteration loops. Thus, the Set Point Managers are executed once per HVAC time step, and they use previous time step information (except for zone load) to calculate their set points.

Set Point Manager:Scheduled

The simplest Set point Manger simply uses a schedule to determine one or more set points. No node data is used as input. The input consists of the Set Point Manager name, the type of controlled variable, the schedule name, and the name of a node list. The node list contains the name of those nodes at which the set point is to be applied. Of course, a node list name can always be simply the name of a single node.

Field: Name

A unique, user assigned name for an instance of a scheduled set point manager. Anywhere in the input that this set point manager is used, it is referred to by this name.

Field: Control variable

The type of variable that will be controlled. The choices are: TEMP (temperature), HUMRAT humidity ratio), FLOW (mass flow rate), PRESSURE, or ENTHALPY (specific enthalpy). For this type of set point manager, this field should be TEMP.

Field: Schedule Name

The name of a schedule whose values are temperatures in °C. These schedule value for the hour is the set point for this type of set point manager.

Field: Name of the Set Point Node List

The name of a Node List object containing the names of the HVAC system nodes for which temperature set points will be established by this set point manager.

Below is the Input Data Dictionary definition of a Scheduled Set Point Manager.

```
SET POINT MANAGER:SCHEDULED,
  A1 , \field Name
  A2 , \field Control variable
       \type choice
       \key TEMP
       \key HUMRAT
       \key FLOW
       \key PRESSURE
       \key ENTHALPY
  A3 , \field Schedule Name
       \type object-list
       \object-list ScheduleNames
A4 ; \field Name of the set point node or node list
```

Following is an example of the input for a Scheduled Set Point Manager.

```
SET POINT MANAGER:SCHEDULED, Supply Air Temp Manager,
      TEMP, Seasonal Reset Supply Air Temp Sch, Supply Air Temp Nodes;

  NODE LIST, Supply Air Temp Nodes,
      Air Loop Outlet Node; ! Set Point Node
```

Set Point Manager:Outside Air

The Outside Air Set Point Manager sets the supply air temperature according to the outside air temperature using a reset rule. The reset rule is determined by 2 points: the supply air set point temperature at the outside high (SATOH) and the supply air set point temperature at the outside low (SATOL). If the outside temperature is above the outside high, the supply air temperature is set to SATOH. If the outside temperature is below the outside low, the supply air temperature is set to SATOL. If the outside temperature is between the outside high and outside low, the supply air temperature is linearly interpolated between SATOH and SATOL.

The input consists of the Outside Air Set Point Manager name, the type of controlled variable, a node list name of the nodes affected by the set point, and the data for the reset rule: the supply air set point temperature at the outside low, the outside low, the supply air set point temperature at the outside high, and the outside high.

There is optional input for a second reset rule. First there is the name of a schedule that indicates which rule to use: a value of 1 means use the first rule; a value of 2 means use the second. Next, there are the 4 inputs specifying the second reset rule.

Field: Name

A unique, user assigned name for an instance of an outside air set point manager. Anywhere in the input that this set point manager is used, it is referred to by this name.

Field: Control variable

The type of variable that will be controlled. The choices are: TEMP (temperature), HUMRAT humidity ratio), FLOW (mass flow rate), PRESSURE, or ENTHALPY (specific enthalpy). For this type of set point manager, this field should be TEMP.

Field: Set point at outside low

The supply air temperature set point in ^{o}C at the outside air low for the first reset rule.

Field: Outside low

The outside air low temperature in ^{o}C for the first supply air temperature reset rule. Generally, at this outside air temperature the supply temperature is at its maximum.

Field: Set point at outside high

The supply air temperature set point in ^{o}C at the outside air high for the first reset rule.

Field: Outside high

The outside air high temperature in ^{o}C for the first supply air temperature reset rule. Generally, at this outside air temperature the supply temperature is at its minimum.

Field: Name of the Set Point Node List

The name of a Node List object containing the names of the HVAC system nodes for which temperature set points will be established by this set point manager.

Field: Schedule name

The name of a schedule whose values indicate which reset rule to use. Schedule values of 1 indicate that the first reset will be used. Schedule values of 2 select the second reset rule.

Field: Set point at outside low

The supply air temperature set point in ^{o}C at the outside air low for the second reset rule

Field: Outside low

The outside air low temperature in ^{o}C for the second supply air temperature reset rule. Generally, at this outside air temperature the supply temperature is at its maximum.

Field: Set point at outside high

The supply air temperature set point in ^{o}C at the outside air high for the second reset rule.

Field: Outside high

The outside air high temperature in ^{o}C for the second supply air temperature reset rule. Generally, at this outside air temperature the supply temperature is at its minimum.

Following is the Input Data Dictionary description of the Outside Air Set Point Manager

```
SET POINT MANAGER:OUTSIDE AIR,
  A1 , \field Name
  A2 , \field Control variable
       \type choice
       \key TEMP
       \key HUMRAT
       \key FLOW
       \key PRESSURE
       \key ENTHALPY
   ! Outside air temp reset rule
  N1 , \field Set point at outside low
  N2 , \field Outside low
  N3 , \field Set point at outside high
  N4 , \field Outside high
  A3 , \field Name of a Set Point Manager Set Point Node List
   !
   ! Optional input
   !
   ! Schedule allows scheduling of the outside air reset rule - a schedule value
   ! of 1 means use the first rule; a value of 2 means use the second rule.
  A4 , \field Schedule name
       \type object-list
       \object-list ScheduleNames
   ! 2nd outside air temp reset rule
  N5 , \field Set point at outside low
  N6 , \field Outside low
  N7 , \field Set point at outside high
  N8 ; \field Outside high
```

Below is an example of the input for a Outside Air Set Point Manager

```
SET POINT MANAGER:OUTSIDE AIR, Supply Air Temp Manager 1,
      TEMP,
      16.7, ! set temp at outside low
      0.0,  ! outside low
      12.8, ! set temp at outside high
      32.0, ! outside high
      Supply Air Temp Nodes;

  NODE LIST, Supply Air Temp Nodes,
      Air Loop Outlet Node; ! Set Point Node
```

Set Point Manager:SingleZone Reheat

The Single Zone Reheat Set Point Manager allows the simulation of a single zone reheat system. The Set Point Manager detects the control zone load, zone inlet node flow rate, and zone node temperature and calculates a set point temperature for the supply air that will satisfy the zone load for the control zone. This set point manager creates a variable temperature system. The input consists of the Single Zone Reheat Set Point Manager name, the controlled variable type, the minimum and maximum supply air temperatures, the name of the control zone, the name of the control zone node, the name of the control zone inlet node, and the name of a node or node list containing the nodes whose temperatures are to be set.

Field: Name

A unique, user assigned name for an instance of a single zone reheat set point manager. Anywhere in the input that this set point manager is used, it is referred to by this name.

Field: Control variable

The type of variable that will be controlled. The choices are: TEMP (temperature), HUMRAT (humidity ratio), FLOW (mass flow rate), PRESSURE, or ENTHALPY (specific enthalpy). For this type of set point manager, this field should be TEMP.

Field: minimum supply air temperature

The minimum supply air temperature (in ^{o}C) that is allowed for this system (as set by this set point manager).

Field: maximum supply air temperature

The maximum supply air temperature (in ^{o}C) that is allowed for this system (as set by this set point manager)

Field: zone name of the control zone

The name of the control zone for this single zone reheat system. The heating or cooling load of this zone determines the supply air temperature set point.

Field: node name of zone node

The name of the zone node of the control zone.

Field: node name of zone inlet node

The name of the zone inlet node that is supplying air to the control zone.

Field: Name of the Set Point Node or Node List

The name of a Node or Node List object containing the names of the HVAC system nodes for which temperature set points will be established by this set point manager.

The following shows the Input Data Dictionary description of the Single Zone Reheat Set Point Manager.

```
SET POINT MANAGER:SINGLE ZONE REHEAT,
       \memo We have a two level hierarchy: Set Point Managers and Controllers.  Set
       \memo Point Managers are simulated at a high level - they resemble the function
       \memo of an Energy Management System.  A Set Point Manager can sense any node
       \memo variables and use them to determine the set point of any other node variables.
  A1 , \field Name
  A2 , \field Control variable
       \type choice
       \key TEMP
       \key HUMRAT
       \key FLOW
       \key PRESSURE
       \key ENTHALPY
  N1 , \field minimum supply air temperature
       \units C
  N2 , \field maximum supply air temperature
       \units C
  A3 , \field zone name of the control zone
       \type object-list
       \object-list ZoneNames
  A4 , \field node name of zone node
  A5 , \field node name of zone inlet node
  A6 ; \field Name of a Set Point Manager Set Point Node List
```

Below is an example input for a Single Zone Reheat Set Point Manager.

```
SET POINT MANAGER:SINGLE ZONE REHEAT,
      Supply Air Temp Manager,
      TEMP,
      13.,
      45.,
      NORTH ZONE,
      Zone 3 Node,
      Zone 3 Inlet Node,
      Supply Air Temp Nodes;

  NODE LIST, Supply Air Temp Nodes,
      Heating Coil Air Inlet Node, Air Loop Outlet Node; ! Set Point Node
```

Set Point Manager:Single Zone Min Hum

The Single Zone Minimum Humidity Set Point Manager allows the control of a single zone minimum humidity level. The set point manager detects the humidity level in a control zone and using air and moisture mass balance calculates the supply air humidity ratio needed to maintain the zone relative humidity at or above a given set point. The calculated supply air humidity ratio is then entered as a set point on a designated supply air stream node. A humidifier component placed upstream of this node can then use the humidity ratio set point to control its moisture addition rate.

Field: Name

A unique, user assigned name for an instance of a single zone minimum humidity set point manager. Anywhere in the input that this set point manager is used, it is referred to by this name.

Field: Control variable:

The type of variable that will be controlled. The choices are: TEMP (temperature), HUMRAT (humidity ratio), FLOW (mass flow rate), PRESSURE, or ENTHALPY (specific enthalpy). For this type of set point manager this input should be HUMRAT.

Field: Schedule name

The name of a schedule whose values represent the minimum relative humidity set point of the humidity control zone. The scheduled relative humidity set point values should be a fraction from 0.0 to 1.0.

Field: Name of the Set Point Node or Node List

The name of the HVAC system node at which the calculated humidity ratio set point is set. If the set point is being placed on more than one node, this input should be the name of a Node List.

Field: Name of Control Zone Node

The name of the zone node of the humidity control zone.

IDD description:

```
SET POINT MANAGER:SINGLE ZONE MIN HUM,
       \memo We have a two level hierarchy: Set Point Managers and Controllers.  Set
       \memo Point Managers are simulated at a high level - they resemble the function
       \memo of an Energy Management System.  A Set Point Manager can sense any node
       \memo variables and use them to determine the set point of any other node variables.
  A1 , \field Name
  A2 , \field Control variable:
       \type choice
       \key TEMP
       \key HUMRAT
       \key FLOW
       \key PRESSURE
       \key ENTHALPY
  A3 , \field Schedule name
       \type object-list
       \object-list ScheduleNames
       \note schedule values are zone minimum relative humidities (fraction)
A4 , \field Name of the set point node or node list
       \note node at which humidity will be set
  A5 ; \field Name of a Node List (or Node)
       \note zone nodes of zones whose humidity is being controlled
```

An IDF example:

```
SET POINT MANAGER:SINGLE ZONE MIN HUM,
  Zone Min Set Point Manager,
  HUMRAT,
  Min Relative Hum Set Sch,
  Air Loop Outlet Node,
  Zone 2 Node;
```

Group – Controllers

Controls (Air Loop and Zone Equipment)

A Controller mimics the function of an actual physical controller in a somewhat rudimentary way. It can sense one node variable, compare it with its set point, and determine the desired value for another node variable. It should be noted that a controller cannot span a loop manager boundary (but a Set Point Manager can). Thus, in an air loop, the sensed node and the controlled device must be in the air loop simulation. This means that a single zone system cannot be modeled with a simple controller sensing zone temperature and controlling coil water flow. Instead this must be modeled as a Set Point Manager sensing a zone temperature and resetting the supply air temperature set point each time step. This is artificial but should simplify the control modeling task. It should also be noted that there are various types of controllers and that each controller might hook into loops in a slightly different way. As a result, each controller type is described separately below.

Controller:Simple

The simple controller is really a solution inverter. For a coil the simulation cannot be inverted where the mass flow rate of the water flow through the coil can be solved directly given an air temperature. Thus, this “controller” will numerically step through all of the water flow possibilities by an interval halving technique until the mass flow rate is determined to meet the specified outlet air temperature within a specified user tolerance.

As the reader probably noted when reading the descriptions of the coil syntax shown earlier in this section, there were no controls attached directly to a particular component. This is because the input can be simplified somewhat by entering node names to be controlled. This avoids having to search through multiple lists of component types for the sake of simply controlling components. The CONTROLLER:SIMPLE shown below is a way on controlling variables at one node based on

conditions at another node. After the identifying name for the simple controller, the user must define which control variable the controller is managing. These options include TEMP (for temperature), HUMRAT (for humidity ratio), FLOW (for mass flow rate), PRESSURE (for total pressure), and ENTHALPY.

The next two parameters in the input syntax are node names corresponding to the nodes which are the input and output points for the controller, respectively. These two numbers are followed by the offset and the throttling range of the controller. Finally, the last two numbers represent the maximum and minimum values allowed for the actuated variable at the actuated node. For example, in the case of a cooling coil, the control variable might be the outlet air temperature of the coil while the actuated variable might be the water flow rate through the coil.

Field: Name

This is the unique name of the controller.

Field: Control variable

This was setup to be generic but to date has only been used for temperature control of water coil in the air loop simulation. The current keyword that works is TEMP for temperature. Normally specified for the coil outlet temperature.

Field: Action

The next input refers to the “action” of the control. This can be best described by an example. In a coil where water mass flow rate is to be controlled, a coil will increase the mass flow rate through the coil when more heating or cooling is requested. In a heating coil, this increases the value of heat transfer from the water to the air stream. As a result, this is considered a “NORMAL” action controller. In a cooling coil, an increase in water mass flow rate through the coil decreases the value of heat transfer from the water to the air stream (absolute value increases, but since cooling is traditional described as a negative number, an increase in absolute value results in a decrease in the actual heat transfer value). Thus, the cooling coil controller has “REVERSE” action since an increase in flow rate results in a decrease in heat transfer

Field: Actuator variable

This was again meant to be more generic but currently has only been used to control the mass flow rate of the heating or cooling coil. This actuator variable is normally set to the keyword FLOW to control the mass flow rate.

Field: Control_Node

Name of the control node that the temperature is sensed.

Field: Actuator_Node

Name of the actuated node that controls the mass flow rate.

Field: Offset

The coil is controlled by knowing the outlet temperature specified by the set point manager and setting the outlet conditions to meet this temperature. The hot and chilled water coils use complex models that cannot be inverted directly. Therefore, to determine the correct mass flow rate for the hot or cold water the models are inverted numerically using an iterative procedure. The iterative solution uses an interval halving routine and needs a termination criteria that is set with the Control Offset parameter. The control offset is the maximum difference between the actual temperature at the set point node and the set point temperature. This control offset is set to a small temperature difference, such as 0.01 to denote 1/100 degree C.

Field: Throttling Range

For proportional control, throttling range denotes the range of the controlled temperature over the full range of the actuator. The Simple Controller uses ideal control (the controlled temperature will always be within the control offset of the set point temperature) so Throttling Range is unused.

Field: Max Actuated Flow

This is the maximum water flow (kg/sec) through the coil. Set to the maximum design water flow for the coil.

Field: Min Actuated Flow

Set to the minimum design water flow (kg/sec) for the water coil, normally a shut off valve that is set to zero.

```
CONTROLLER:SIMPLE,
  A1 , \field Name
  A2 , \field Control variable:
       \type choice
       \key TEMP
       \key HUMRAT
       \key FLOW
       \key PRESSURE
       \key ENTHALPY
  A3 , \field Action:
       \type choice
       \key NORMAL
       \key REVERSE
  A4 , \field Actuator variable
       \type choice
       \key FLOW
  A5 , \field Control_Node
  A6 , \field Actuator_Node
  N1 , \field Offset
  N2 , \field Throttling Range
  N3 , \field Max Actuated Flow
       \units kg/sec
  N4 ; \field Min Actuated Flow
       \units kg/sec
```

An example of this statement in an IDF is:

```
Controller:Simple,
      Main Cooling Coil Controller,  !Controller Name
      TEMP,                          !Control Variable
      Reverse,                       !Action
      FLOW,                          !Actuator variable
      NODE_3,                        !Control node
      NODE_21,                       !Actuator Node
      0.1,                           !Control Offset
      6.0,                           !Throttling Range
      1.1,                           !Max Actuated {Flow: kg/sec}
      0.0;                           !Min Actuated {Flow: kg/sec}
```

Controller:Outside Air

A mixed air box has its own controller type called CONTROLLER:OUTSIDE AIR. The purpose of the outside air controller is to use outside air for free cooling whenever possible. The outside air controller includes a number of user selectable limit controls. If any of the selected limits are exceeded, the outside airflow rate is set to the minimum. If all the limits are satisfied, the outside air controller does the following: if the outside air temperature is greater than or equal to the mixed air temperature set point, the outside air flow rate is set to the maximum; if the outside air temperature is less than the mixed air temperature set point, the outside air controller will modulate the outside air flow so that the mixed air temperature will match the mixed air set point temperature.

Field: Name

The unique user assigned name for an instance of an outside air controller. Any other object referencing this outside air controller will use this name.

Field: EconomizerChoice

The options for this field are ECONOMIZER or NO ECONOMIZER. Choosing ECONOMIZER allows the economizer to operate; choosing NO ECONOMIZER means the economizer will not operate and the outside airflow rate will be at the minimum for the entire simulation.

Field: ReturnAirTempLimit

This input establishes whether or not there is a limit control on the return air temperature. The choices are RETURN AIR TEMP LIMIT or NO RETURN AIR TEMP LIMIT. If RETURN AIR TEMP LIMIT is chosen, whenever the outside air temperature is greater than the return air temperature the outside airflow rate is set to the minimum. If NO RETURN AIR TEMP LIMIT is chosen, no limit check on the return air temperature is performed.

Field: ReturnAirEnthalpyLimit

This input establishes whether or not there is a limit control on the return air enthalpy. The choices are RETURN AIR ENTHALPY LIMIT or NO RETURN AIR ENTHALPY LIMIT. If RETURN AIR ENTHALPY LIMIT is chosen, whenever the outside air enthalpy is greater than the return air enthalpy the outside airflow rate is set to the minimum. If NO RETURN AIR ENTHALPY LIMIT is chosen, no limit check on the return air enthalpy is performed.

Field: Lockout

Choices for this field are LOCKOUT or NO LOCKOUT. LOCKOUT means that the packaged DX unit compressors cannot run when the outside air dampers are open. NO LOCKOUT means that the packaged DX unit compressors can run even when the outside air dampers are open. **Note:** use of this input has not been implemented.

Field: MinimumLimit

Choices for this field are FIXED MINIMUM or PROPORTIONAL MINIMUM. FIXED MINIMUM means that the minimum outside airflow rate is fixed no matter what the actual system flow rate is. PROPORTIONAL MINIMUM means the minimum outside airflow rate varies in proportion to the total system air flow rate. **Note:** use of this input is not implemented. The program assumes a fixed minimum.

Field: Control_Node

Name of the node at which the mixed air set point is set. The outside air controller senses the temperature at this node and attempts to control that temperature to the node set point.

Field: Actuated_Node

The name of the node that is associated with the outside air damper. This should be the outside air node in the outside air mixer object associated with this outside air controller.

Field: minimum outside air flow rate

Input for this field is the minimum outside air volumetric flow rate for the system in cubic meters per second.

Field: maximum outside air flow rate

Input for this field is the maximum outside air volumetric flow rate for the system in cubic meters per second.

Field: temperature limit

Input for this field is the outside air temperature high limit (^{o}C) for economizer operation. If the outside air temperature is above this limit, the outside airflow rate will be set to the minimum. No input in this field means that there is no outside air temperature high limit control.

Field: temperature lower limit

Input for this field is the outside air temperature low limit (^{o}C) for economizer operation. If the outside air temperature is below this limit, the outside airflow rate will be set to the minimum. No input in this field means that there is no outside air temperature low limit control.

Field: enthalpy limit

Input for this field is the outside air enthalpy limit (in J/kg) for economizer operation. If the outside air enthalpy is above this value, the outside airflow rate will be set to the minimum. No input in this field means that there is no outside air enthalpy limit control.

Field: Relief_Air_Outlet_Node

The name of the relief air node of the outside air mixer associated with this outside air controller.

Field: Return_Air_Node

The name of the return air node of the outside air mixer associated with this outside air controller.

```
CONTROLLER:OUTSIDE AIR,
  A1 , \field Name
  A2 , \field EconomizerChoice
       \type choice
       \key ECONOMIZER
       \key NO ECONOMIZER
  A3 , \field ReturnAirTempLimit
       \type choice
       \key RETURN AIR TEMP LIMIT
       \key NO RETURN AIR TEMP LIMIT
  A4 , \field ReturnAirEnthalpyLimit
       \type choice
       \key RETURN AIR ENTHALPY LIMIT
       \key NO RETURN AIR ENTHALPY LIMIT
  A5 , \field Lockout
       \type choice
       \key LOCKOUT
       \key NO LOCKOUT
  A6 , \field MinimumLimit
       \type choice
       \key FIXED MINIMUM
       \key PROPORTIONAL MINIMUM
  A7 , \field Control_Node
       \note mixed air node
  A8 , \field Actuated_Node
       \note outside air inlet node
  N1 , \field minimum outside air flow rate
       \units m3/sec
  N2 , \field maximum outside air flow rate
       \units m3/sec
  N3 , \field temperature limit
       \units C
  N4 , \field temperature lower limit
       \units C
  N5 , \field enthalpy limit
       \units J/kg
  A9 , \field Relief_Air_Outlet_Node
  A10; \field Return_Air_Node
```

An example of this statement in an IDF is:

```
CONTROLLER:OUTSIDE AIR,
      OA Controller 1,
      ECONOMIZER,
      NO RETURN AIR TEMP LIMIT,
      NO RETURN AIR ENTHALPY LIMIT,
      NO LOCKOUT,
      FIXED MINIMUM,
      NODE_52, NODE_51,
      0.4333, 1.3,
      19., 4.,
      ,
      NODE_50, NODE_1;
```

Controller:Zone Loop (Not Applicable)

The zone loop controller is used to manage components such as reheat coils. Its syntax is similar to the simple controller. This controller is left in the code until it can be determined if it will be removed. The current intent is to remove this zone controller and only use a single component ADU with the complex control built into the ADU.

Group – Evaporative Coolers

This group of objects describes the properties and configuration for the evaporative coolers models for the HVAC section.

EvapCooler:Direct:CelDekPad

The direct stage, shown in the figure below, consists of a rigid media evaporative pad, with water recirculated from a reservoir. The water is pumped from the reservoir to a water distribution header, for water feed by gravity from above the media. The evaporative pad provides the area for the adiabatic saturation of the air. While the process provides a lower dry bulb temperature, the moisture content of the leaving air is higher than the entering condition. The direct stage is used for comfort cooling in a building where adding humidity to the air can be tolerated.

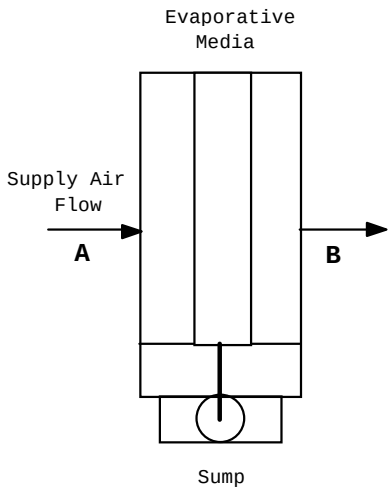

Figure 34. Direct Stage Evaporative Cooler

The thermodynamic process is a simultaneous heat and mass transfer, or adiabatic cooling, and follows a constant enthalpy line on the psychrometric chart, it is shown in the figure below as a process from A to B. Since the deviation of the constant wet-bulb line and the constant enthalpy line is small, it is assumed that the wet bulb temperature is constant across the direct evaporative stage.

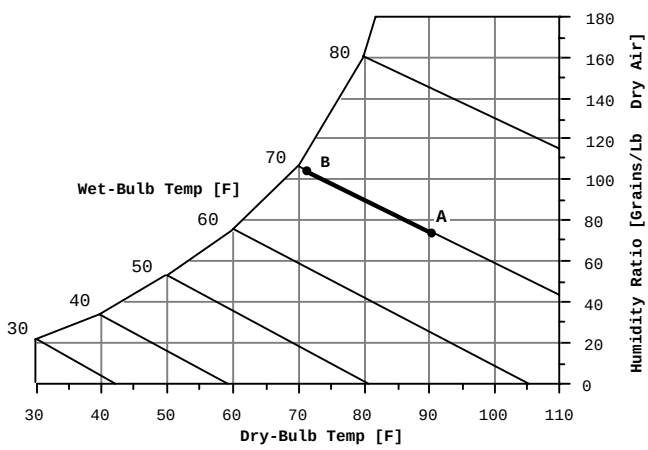

Figure 35. Psychrometric Chart -- Constant Enthalpy

If the direct evaporative process were 100% efficient, the leaving dry bulb temperature would equal the entering wet bulb temperature. The efficiency of the direct evaporative process is less than 100% and by defining saturation efficiency (ε_{se}) for the direct stage or evaporative pad, the leaving dry bulb temperature can be expressed by the following equation.

$$T_{db\ sup\ out} = T_{db\ sup\ in} - \varepsilon_{se}*(T_{odb} - T_{owb})$$

Field: Evap Cooler Name

A unique identifying name for each evaporative cooler.

Field: Available Schedule

Schedule which defines when the evaporative cooler is available.

Field: Direct Pad Area

The area of the Celdek pad in m^2. With the Area and mass flow rate the air velocity is calculated and is used to determine the Saturation Efficiency.

Field: Direct Pad Depth

The depth of the Celdek pad in meters. The pad depth is used to determine the Saturation Efficiency.

Field: Recirc Water Pump Power Consumption

This field is used to specify the power consumed by the Evaporative Cooler recirculating pump in Watts [W].

Field: Evap_Air_Inlet_Node

The name of the evaporative cooler air inlet from the Air Loop Simulation.

Field: Evap_Air_Outlet_Node

The name of the evaporative cooler air outlet from the Air Loop Simulation.

Field: Control Type

Currently the only control type implemented is Constant. Other control types are being developed.

```
EvapCooler:Direct:CelDekPad,
  A1 , \field EvapCooler Name
       \type alpha
  A2 , \field Available Schedule
       \type object-list
       \object-list ScheduleNames
  N1 , \field Direct Pad Area
       \units m2
       \minimum 0.0
  N2 , \field Direct Pad Depth
       \units m
       \minimum 0.0
  N3 , \field Recirc Water Pump Power Consumption
       \units W
  A3 , \field Evap_Air_Inlet_Node
  A4 , \field Evap_Air_Outlet_Node
  A5 ; \field Control Type
```

And, an IDF example showing how it is:

```
EvapCooler:Direct:CelDekPad,
      DirectEvapCooler1 ,   !EvapCooler Name
      FanAndCoilAvailSched, !Evap Schedule
      0.6 ,                 !Pad Area in m^2
      0.2 ,                 !Pad Depth in m
      225.,                 !Pump Power in W
      EvapCoolerDirectInletAirNode,
      Air Loop Outlet Node,
      Constant ;
```

EvapCooler:Direct:CelDekPad Outputs

The output variables that are available for the Direct Evaporative Cooler are shown:

```
HVAC,Average, Direct Evap Saturation Efficiency
HVAC,Average, Evap Cooler Electric Power[W]
HVAC,Sum, Evap Cooler Electric Energy[J]
HVAC,Sum, Evap Cooler Water Consumption[m3]
```

EvapCooler:InDirect:CelDekPad

The dry coil indirect evaporative cooler, shown in the figure below, has a rigid media pad, similar to the direct evaporative stage, where the adiabatic cooling takes place. The secondary air leaves the rigid media pad and enters an air to air heat exchanger where it cools the supply air flowing through the heat exchanger tubes. The moist secondary air is then exhausted to the environment. The secondary air stream has its own fan.consists of a rigid media evaporative pad, with water recirculated from a reservoir. The water is pumped from the reservoir to a water distribution header, for water feed by gravity from above the media. The evaporative pad provides the area for the adiabatic saturation of the air. While the process provides a lower dry bulb temperature, the moisture content of the leaving air is higher than the entering condition. The direct stage is used for comfort cooling in a building where adding humidity to the air can be tolerated.

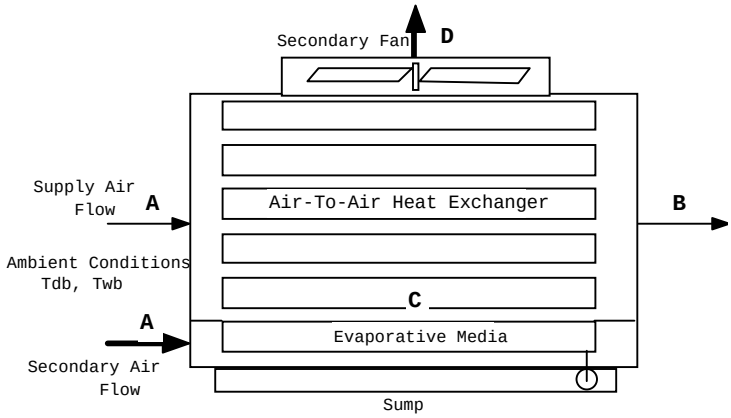

Figure 36. Evaporative Cooler -- Indirect Dry Coil

The process that the secondary air goes through, A to C to D, is shown by the dashed lines in the following figure. Process A to C is adiabatic cooling in the rigid media pad. Then the air enters the shell side of the heat exchanger and is sensibly heated from C to D by the warm supply air passing through the tube side.

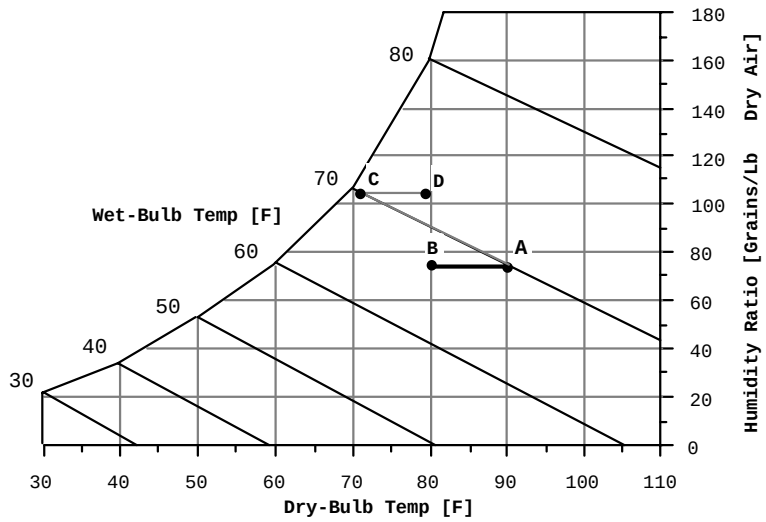

Figure 37. Secondary Air Process -- Indirect Dry Coil Evap Cooler

The advantage of the dry coil heat exchanger is that the heat exchanger does not have the evaporation taking place on the outside of the tubes, thus no mineral deposits are left on the heat exchange surface to reduce the efficiency of the heat exchanger. The rigid media pads are designed to flush the mineral deposits to the sump, so the saturation efficiency of the pad stays relatively constant.

Field: Evap Cooler Name

A unique identifying name for each evaporative cooler.

Field: Available Schedule

Schedule which defines when the evaporative cooler is available.

Field: Direct Pad Area

The area of the Celdek pad in m^2. With the Area and mass flow rate the air velocity is calculated and is used to determine the Saturation Efficiency on the Secondary side of the evpaorative cooler.

Field: Direct Pad Depth

The depth of the Celdek pad in meters. The pad depth is used to determine the Saturation Efficiency on the Secondary side of the evpaorative cooler.

Field: Recirc Water Pump Power Consumption

This field is used to specify the power consumed by the Evaporative Cooler recirculating pump in Watts [W].

Field: Secondary Fan Flow Rate

This field is used to specify the secondary fan flow rate and is specified in [m^3/sec].

Field: Secondary Fan Efficiency

This field is used to specify the efficiency of the fan and is used to calculate the power consumed by the Evaporative Cooler secondary fan.

Field: Secondary Fan Delta Pressure

This field is used to specify the delta pressure across the secondary stage of the evaporative cooler in [Pascals].

Field: Indirect Heat Exchanger Effectiveness

This field is used to specify the effectiveness of the indirect heat exchanger between the primary and secondary air flow.

Field: Evap_Air_Inlet_Node

The name of the evaporative cooler air inlet from the Air Loop Simulation.

Field: Evap_Air_Outlet_Node

The name of the evaporative cooler air outlet from the Air Loop Simulation.

Field: Control Type

Currently the only control type implemented is Constant. Other control types are being developed.

```
EvapCooler:InDirect:CelDekPad,
  A1 , \field EvapCooler Name
       \type alpha
  A2 , \field Available Schedule
       \type object-list
       \object-list ScheduleNames
  N1 , \field Direct Pad Area
       \units m2
       \minimum 0.0
  N2 , \field Direct Pad Depth
       \units m
       \minimum 0.0
  N3 , \field Recirc Water Pump Power Consumption
       \units W
  N4 , \field Secondary Fan Flow Rate
       \units m3/s
       \minimum 0.0
  N5 , \field Secondary Fan Efficiency
       \type real
       \minimum 0.0
       \maximum 1.0
  N6 , \field Secondary Fan Delta Pressure
       \units Pa
       \minimum 0.0
  N7 , \field Indirect Heat Exchanger Effectiveness
       \type real
       \minimum 0.0
  A3 , \field Evap_Air_Inlet_Node
  A4 , \field Evap_Air_Outlet_Node
  A5 ; \Field Control Type
```

And, an IDF example showing how it is specified:

```
EvapCooler:InDirect:CelDekPad,
      IndirectEvapCooler1 ,         !EvapCooler Name
      FanAndCoilAvailSched, !Evap Schedule
      0.6 ,                 !Pad Area in m^2
      0.2 ,                 !Pad Depth in m
      225.,                 !Pump Power in W
      1.0 ,                 !Indirect Pad Fan Flow Rate in m^3/s
      0.7 ,                 !Indirect Fan Efficiency
      200.0,                !Indirect Fan Delta Pressure in Pa
      0.67,                 !Indirect Heat Exchanger Effectiveness
      EvapCoolerIndirectInletAirNode,
      EvapCoolerDirectInletAirNode,
      Constant ;
```

EvapCooler:InDirect:CelDekPad Outputs

The output variables that are available for the Dry InDirect Evaporative Cooler are shown:

```
HVAC,Average, Indirect Dry Evap Saturation Efficiency
HVAC,Average, Indirect Dry Evap Total Stage Efficiency
HVAC,Average, Evap Cooler Electric Power[W]
HVAC,Sum, Evap Cooler Electric Energy[J]
HVAC,Sum, Evap Cooler Water Consumption[m3]
```

EvapCooler:InDirect:WetCoil

The wetted coil evaporative cooler shown in the figure below, has water sprayed directly on the tubes of the heat exchanger where latent cooling takes place. The vaporization of the water on the outside of the heat exchanger tubes allows the simultaneous heat and mass transfer which removes heat from the supply air on the tube side. Then the moist secondary air is exhausted. The secondary air stream has its own fan.

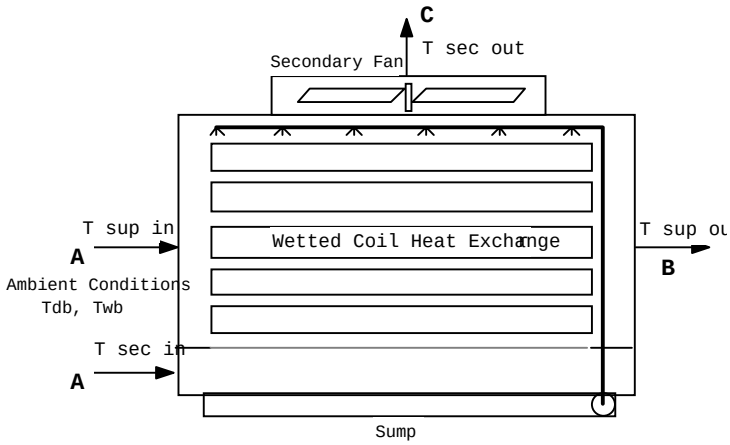

Figure 38. Evaporative Cooler -- Wet Coil

The process that the secondary air goes through, A to C on the following figure, is a path of simultaneous heat and mass transfer, but it does not follow a line of constant enthalpy as in the direct stage. The process is not adiabatic due to the heat gain from the supply air flowing through the tubes of the heat exchanger.

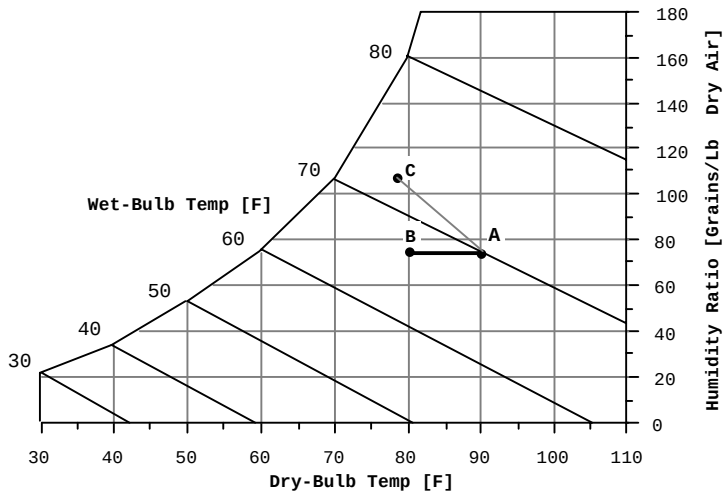

Figure 39. Secondary Air Process – Indirect Wet Coil Evap Cooler

The wet coil heat exchanger can have a higher stage efficiency than the dry coil due to a higher heat transfer rate on the outside of the heat exchanger tubes. Over the operating lifetime of the heat exchanger, the vaporization taking place on the heat exchange surface can leave mineral deposits which will decrease the effectiveness of the heat exchanger.

Field: Evap Cooler Name

A unique identifying name for each evaporative cooler.

Field: Available Schedule

Schedule which defines when the evaporative cooler is available.

Field: Coil Maximum Efficiency

The maximum efficiency of the stage is a combination of the efficiency due to the simultaneous heat and mass transfer on the outside of the tube and the efficiency of the heat exchanger. This value can be higher than the dry coil overall efficiency since the convective coefficients on the outside of the tube are larger.

Field: Coil Flow Ratio

The Coil Flow Ratio is determined from performance data. The Coil Flow Ratio tells how quickly the efficiency of the stage would decrease with a mismatch of the supply and secondary flows.

Field: Recirc Water Pump Power Consumption

This field is used to specify the power consumed by the Evaporative Cooler recirculating pump in Watts [W].

Field: Secondary Fan Flow Rate

This field is used to specify the secondary fan flow rate and is specified in [m^3/sec].

Field: Secondary Fan Efficiency

This field is used to specify the efficiency of the fan and is used to calculate the power consumed by the Evaporative Cooler secondary fan.

Field: Secondary Fan Delta Pressure

This field is used to specify the delta pressure across the secondary stage of the evaporative cooler in [Pascals].

Field: Evap_Air_Inlet_Node

The name of the evaporative cooler air inlet from the Air Loop Simulation.

Field: Evap_Air_Outlet_Node

The name of the evaporative cooler air outlet from the Air Loop Simulation.

Field: Control Type

Currently the only control type implemented is Constant. Other control types are being developed.

```
EvapCooler:InDirect:WetCoil,
  A1 , \field EvapCooler Name
       \type alpha
  A2 , \field Available Schedule
       \type object-list
       \object-list ScheduleNames
  N1 , \field Coil Maximum Efficiency
       \type real
       \minimum 0.0
       \maximum 1.0
  N2 , \field Coil Flow Ratio
       \type real
  N3 , \field Recirc Water Pump Power Consumption
       \units W
  N4 , \field Secondary Fan Flow Rate
       \units m3/s
       \minimum 0.0
  N5 , \field Secondary Fan Efficiency
       \type real
       \minimum 0.0
       \maximum 1.0
  N6 , \field Secondary Fan Delta Pressure
       \units Pa
       \minimum 0.0
  A3 , \field Evap_Air_Inlet_Node
  A4 , \field Evap_Air_Outlet_Node
  A5 ; \Field Control Type
```

And, an IDF example showing how it is specified:

```
EvapCooler:InDirect:WetCoil,
      WetIndEvapCooler1 ,   !EvapCooler Name
      FanAndCoilAvailSched, !Evap Schedule
      0.8 ,                 !Coil Maximum Efficiency
      0.16,                 !Coil Flow Ratio
      225.,                 !Pump Power in W
      1.0 ,                 !Indirect Pad Fan Flow Rate in m^3/s
      0.7 ,                 !Indirect Fan Efficiency
      200.0,                !Indirect Fan Delta Pressure in Pa
      EvapCoolerInletAirNode,
      Air Loop Outlet Node,
      Constant ;
```

EvapCooler:InDirect:WetCoil Outputs

The output variables that are available for the Wet InDirect Evaporative Cooler are shown:

```
HVAC,Average, Indirect Wet Evap Total Stage Efficiency
HVAC,Average, Evap Cooler Electric Power[W]
HVAC,Sum, Evap Cooler Electric Energy[J]
HVAC,Sum, Evap Cooler Water Consumption[m3]
```

Group – Heat Recovery

Heat Exchanger:Air to Air:Flat Plate

The air-to-air flate plate heat exchanger is an HVAC component typically used for exhaust or relief air heat recovery. The user can choose the flow arrangement: counter flow, parallel flow, or cross flow with both streams unmixed. The input requires no geometric data. Performance is defined by specifying primary outlet air temperature at nominal (user specified) inlet conditions. In addition, the ratio $(h \cdot A)_p$ / $(h \cdot A)_s$ at nominal flow needs to be input, where h is the convective heat transfer coefficient, A is the surface area, p stands for primary side, s for secondary side.

Field: Name

A unique user assigned name for a particular air-to-air flat plate heat exchanger unit. Any reference to this unit by another object will use this name.

Field: Available Schedule

The name of the schedule (ref: Schedule) that denotes whether the unit can run during a given hour. A schedule value greater than 0 (usually 1 is used) indicates that the unit can be on during the hour. A value less than or equal to 0 (usually 0 is used) denotes that the unit must be off for the hour

Field: flow arrangement

The user specified flow arrangement of the heat exchanger. The possible inputs are *Counter Flow*, *Parallel Flow*, or *Cross Flow Both Unmixed*.

Field: Economizer lockout

This input denotes whether the heat exchanger unit is locked out (bypassed) when the air side economizer is operating. The input choices are *yes* (meaning locked out) or *no*.

Field: hA ratio

The ratio $(h \cdot A)_p$ / $(h \cdot A)_s$ at nominal flow. h is the surface convective heat transfer coefficient, A is the heat transfer area, and p and s stand for primary side and secondary side respectively. A typical value for this ratio is 1.0.

Field: Nominal supply air flow rate

The nominal primary side air flow rate in cubic meters per second.

Field: Nominal supply air inlet temperature

The nominal primary side air inlet temperature in Celsius.

Field: Nominal supply air outlet temperature

The nominal primary side air outlet temperature in Celsius.

Field: Nominal secondary air flow rate

The nominal secondary side air flow rate in cubic meters per second.

Field: Nominal secondary air inlet temperature

The nominal secondary side air inlet temperature in Celsius.

Field: Nominal electric power

The electric power consumption of the unit in watts at nominal conditions.

Field: Supply air inlet node

The name of the HVAC system node from which the unit draws its primary inlet air.

Field: Supply air outlet node

The name of the HVAC system node to which the unit sends its primary outlet air.

Field: Secondary air inlet node

The name of the HVAC system node from which the unit draws its secondary inlet air.

Field: Secondary air outlet node

The name of the HVAC system node to which the unit sends its secondary outlet air.

The full IDD specification follows:

```
HEAT EXCHANGER:AIR TO AIR:FLAT PLATE,
  A1, \field Name
      \type alpha
  A2, \field Available Schedule
      \type object-list
      \object-list ScheduleNames
  A3, \field flow arrangement
      \type choice
      \key Counter Flow
      \key Parallel Flow
      \key Cross Flow Both Unmixed
  A4, \field Economizer lockout
      \type choice
      \key yes
      \key no
      \note Yes means that the heat exchanger will be locked out (off)
      \note when the economizer is operating
  N1, \field hA ratio
      \type real
      \note ratio of h*A for supply side to h*A for exhaust side
      \minimum 0.0
  N2, \field Nominal supply air flow rate
      \type real
      \minimum 0.0
      \units m3/s
```

An IDF example:

```
HEAT EXCHANGER:AIR TO AIR:FLAT PLATE,
      OA Heat Recovery 1,
      FanAndCoilAvailSched,
      Counter Flow, ! flow arrangement
      Yes,          ! econo lockout
      1.0,          ! hA ratio
      0.4333,       ! primary air volume flow rate
      5.0,          ! primary air inlet temperature
      15.0,         ! primary air outlet temperature
      0.4333,       ! secondary air volume flow rate
      20.0,         ! secondary air inlet temperature
      0.0,          ! nominal power consumption
      Outside Air Inlet Node,               ! primary inlet node
      Heat Recovery Outlet Node,            ! primary outlet node
      Relief Air Outlet Node,               ! secondary inlet node
      Heat Recovery Secondary Outlet Node;  ! secondary outlet node
```

Heat Exchanger:Air to Air:Flat Plate Outputs

```
HVAC,Average,Sensible Heat Recovery Rate[W]
HVAC,Sum,Sensible Heat Recovery[J]
HVAC,Average,Total Heat Recovery Rate[W]
HVAC,Sum,Total Heat Recovery[J]
HVAC,Average,Heat Recovery Elec Use Rate[W]
HVAC,Sum,Heat Recovery Elec Use Energy[J]
```

Group – Electric Load Center-Generator Specifications

Electric Load Center:Distribution

The electric load center distribution manager operates generators specified in the simulation.

Field: Load Center Name

This alpha field contains the identifying name for the electric load center distribution scheme..

Field: Generator List Name

This alpha field contains the identifying name for the list of generators in the set.

Field: Generator Operation Scheme Type

This alpha field specifies the type of operating scheme for the generator set. In beta 5, the only available operating scheme is BASELOAD. This scheme operates the generators at their rated capacity when the the generator is scheduled ON. The second scheme,.DEMANDLOAD, will use energy meters to control generator operation

Field: Load Center Electric Demand Meter Name

This alpha field specifies the name of the electric demand meter for generator control. This option has not been implemented in beta 5.

Field: Load Center Electric Generation Meter Name

This alpha field specifies the name of the electric generation meter for generator control. This option has not been implemented in beta 5.

```
ELECTRIC LOAD CENTER:DISTRIBUTION,
  A1 , \field Load Center Name
  A2 , \field Generator List Name
  A3,  \field Generator Operation Scheme Type
       \type choice
       \key BASELOAD
       \key DEMANDLOAD
  A4,  \field Load Center Electric Demand Meter Name
  A5;  \field Load Center Electric Generation Meter Name
```

An example from the IDF:

```
ELECTRIC LOAD CENTER:DISTRIBUTION,
  Generator Load Center,
  Backup Generators,
  BASELOAD,
  PlantMeter,
  GeneratorPowerMeter;
```

Electric Load Center:Generators

The electric load center generators provides a set of scheduled electric generators for electric power generation.

Field: Generator List Name

This alpha field contains the identifying name for the generators in the set.

FieldSet: Name, Type, Rated Output, Availability up to 5

Each generator is specified by an identifying name, a keyword that indicates the type of generator, the rated output of the generator and the availability schedule of the generator.

Field: Generator #1 Name

This alpha field contains the identifying name for the first generator in the list.

Field: Generator #1 Type

This alpha field contains the keyword for the type of generator, either DIESEL, or GASTURBINE.

Field: Generator #1 Rated Electric Power Output

This numeric field contains the rated electric output of the generator in Watts.

Field: Generator #1 Availability Schedule

This alpha field is used as an identifying field for the generator availability Schedule. This field ties to the ScheduleType input structure, which must also be defined.

```
ELECTRIC LOAD CENTER:GENERATORS,
  A1 , \field Generator List Name
  A2 , \field Generator #1 Name
  A3 , \field Generator #1 Type
       \type choice
       \key GENERATOR:DIESEL
       \key GENERATOR:GASTURBINE
  N1 , \field Generator #1 Rated Electric Power Output
  A4 , \field Generator #1 Availability Schedule
       \type object-list
       \object-list ScheduleNames
-- reduced for brevity --
```

An example from the IDF:

```
ELECTRIC LOAD CENTER:GENERATORS,
   Backup Generators,
   Cat Diesel,
   GENERATOR:DIESEL,
   50000,
   On Peak,
   Solar Turbine,
   GENERATOR:GAS TURBINE,
   30000,
   Off Peak;
```

Generator: Diesel

The Diesel engine generator uses a modified Otto cycle. The diesel generator model uses the electrical load and engine generator size to compute part-load ratios (PLR). Fuel energy input and recoverable jacket and lube oil heat are then computed. Finally, the recoverable exhaust heat is calculated.

Manufacturer's curves or tables must be obtained for diesel engine generators to derive the equipment performance parameters that are specified in the quadratic curve fits. Note that simple transformation of the form of the manufacturer's curves may be required. Electric energy output/fuel energy input is related to the Part Load Ratio part-load ratio (i.e., electric/load generator capacity) with a polynomial. Recoverable jacket heat/fuel energy equipment, recoverable lube oil heat/fuel energy input equipment performance, total exhaust heat/fuel energy input equipment, exhaust gas temperature/fuel energy input equipment performance parameters are all specified with a quadratic curve fit.

When the heat recovery curve fits = 0.0, this means that no heat recovery is done on the diesel generator exhaust gas; and no heat recovery is specified.

Field: Generator Name

This alpha field contains the identifying name for the diesel generator.

Field: Rated Power Output

The design nominal capacity of the Diesel Generator in Watts [W].

Field: Electric Circuit Node

This Named node contains where the electric power is put in the program simulation for use by the electric equipment in the Load Center.

Field: Minimum Part Load Ratio

This field contains the minimum allowed operating fraction of full load.

Field: Maximum Part Load Ratio

This field contains the maximum allowed operating fraction of full load.

Field: Opt Part Load Ratio

This alpha field contains the optimal operating fraction of full load. This is the part load ratio that gives the optimal production of electric power with the least amount of fuel usage.

Field: the Shaft Power curve

This alpha field contains the name of the shaft power curve. The curve itself is specified separately using a curve object (see Curve:Quadratic). The Shaft Power Curve is a quadratic equation that

determines the electric output versus the fuel used. Used to calculate the electric energy output divided by the fuel energy consumption as a function of part-load ratio. The defining equation is:

$$ShaftPowerToFuelRatio = C_1 + C_2 RL + C_3 RL^2$$

where RL is the Ratio of Load to Rated Power Output.

Field: the Recovery Jacket Heat curve

This alpha field contains the name of the Recovery Jacket Heat curve. The curve itself is specified separately using a curve object (see Curve:Quadratic). The Recovery Jacket Heat Curve is a quadratic equation that determines the ratio of recovery jacket heat to fuel energy. Used to calculate the recoverable jacket heat as a function of part-load ratio.

The defining equation is:

$$RecoveryJacketHeatToFuelRatio = C_1 + C_2 RL + C_3 RL^2$$

where RL is the Ratio of Load to Rated Power Output.

Field: the Recovery Lube Heat curve

This alpha field contains the name of the Recovery Lube Heat curve. The curve itself is specified separately using a curve object (see Curve:Quadratic). The Recovery Lubricant Heat Curve is a quadratic equation that determines the ratio of recovery lube heat to fuel energy. Used to calculate the recoverable lube oil heat as a function of part-load ratio. The defining equation is:

$$RecoveryLubeHeatToFuelRatio = C_1 + C_2 RL + C_3 RL^2$$

where RL is the Ratio of Load to Rated Power Output.

Field: the Total Exhaust Energy curve

This alpha field contains the name of the Total Exhaust Energy curve. The curve itself is specified separately using a curve object (see Curve:Quadratic). The Total Exhaust Energy Curve is a quadratic equation that determines the ratio of total exhaust energy to fuel energy. Used to calculate the total exhaust heat as a function of part-load ratio. The defining equation is:

$$TotalExhaustToFuelRatio = C_1 + C_2 RL + C_3 RL^2$$

where RL is the Ratio of Load to Rated Power Output.

Field: the Exhaust Temperature curve

This alpha field contains the name of the Exhaust Temperature curve. The curve itself is specified separately using a curve object (see Curve:Quadratic). The Exhaust Temperature Curve is a quadratic equation that determines the absolute exhaust temperature. Used to determine the exhaust gas temperature as a function of part-load ratio. The defining equation is:

$$AbsoluteExhaustTemperature = C_1 + C_2 RL + C_3 RL^2$$

where RL is the Ratio of Load to Rated Power Output.

UA Curve

The UA curve applies to the exhaust gas heat exchanger. The curve is an equation that determines the overall heat transfer coefficient for the exhaust gasses with the stack. The heat transfer coefficient ultimately helps determine the exhaust stack temperature. The defining equation is:

$$UAToCapacityRatio = C_1 GeneratorRatedPowerOutput^{C_2}$$

The following two fields contain the coefficients for the equation.

Field: Coefficient1 of UA curve

This numeric field contains the first coefficient for the overall heat transfer coefficient curve.

Field: Coefficient2 of UA curve

This numeric field contains the second (exponential) coefficient for the overall heat transfer coefficient curve.

Field: Maximum Exhaust Flow per KW of Generator Output

Maximum exhaust flow per unit capacity for diesel engines. The parameter sets an upper limit on exhaust gas flow and exhaust gas heat recovery for diesel engines. Units: kg/sec per kW capacity

Field: Design Minimum Exhaust temp. (Steam Saturation Temperature)

This is the design engine stack saturated steam temperature in degrees C.

Field: Fuel Heating Value

Heating Value of Fuel in KJ/kg

Field: Design heat recovery water mass flow rate

Design Water mass flow rate through heat recovery loop in kg/s.

Field: Heat_Recovery_Side_Inlet_Node

This alpha field contains the identifying name for the diesel generator heat recovery side inlet node.

Field: Heat_Recovery_Side_Outlet_Node

This alpha field contains the identifying name for the diesel generator heat recovery side outlet node.

```
GENERATOR:DIESEL,
       \memo This generator model is the empirical model from the Building Loads
       \memo and System Thermodynamics (BLAST) program.  Engine performance
       \memo curves are generated by fitting catalog data to second order
       \memo polynomial equations.  Three sets of coefficients are required.
  A1, \field Generator Name
  N1, \field Rated Power Output
       \units W
  A2, \field Electric Circuit Node
  N2, \field Minimum Part Load Ratio
  N3, \field Maximum Part Load Ratio
  N4, \field Opt Part Load Ratio
  A3, \field the Shaft Power curve
       \type object-list
       \object-list QuadraticCurves
       \note curve = a + b*PLR + c*PLR**2
       \note PLR = Ratio of Generator Load to Rated Power Output
  A4, \field the Recovery Jacket Heat curve
       \type object-list
       \object-list QuadraticCurves
       \note curve = a + b*PLR + c*PLR**2
       \note PLR = Ratio of Generator Load to Rated Power Output
  A5, \field the Recovery Lube Heat curve
       \type object-list
       \object-list QuadraticCurves
       \note curve = a + b*PLR + c*PLR**2
       \note PLR = Ratio of Generator Load to Rated Power Output
  A6, \field the Total Exhaust Energy curve
       \type object-list
       \object-list QuadraticCurves
       \note curve = a + b*PLR + c*PLR**2
       \note PLR = Ratio of Generator Load to Rated Power Output
  A7, \field the Exhaust Temperature curve
       \type object-list
       \object-list QuadraticCurves
       \note curve = a + b*PLR + c*PLR**2
       \note PLR = Ratio of Generator Load to Rated Power Output
```

```
  N5, \field Coefficient1 of UA curve
       \note curve = C1 * Generator Rated Power Output**C2
  N6, \field Coefficient2 of UA curve
       \note curve = C1 * Generator Rated Power Output**C2
  N7, \field Maximum Exhaust Flow per KW of Generator Output
       \units
  N8, \field Design Minimum Exhaust temp. (Steam Saturation Temperature)
       \units C
  N9, \field Fuel Heating Value
       \units
  N10, \field Design heat recovery water mass flow rate
       \units kg/s
  A8, \field Heat_Recovery_Side_Inlet_Node
  A9; \field Heat_Recovery_Side_Outlet_Node
```

And, an IDF example showing how it is used:

```
GENERATOR:DIESEL, Cat Diesel,
        50000,                            !Rated Power Output
        Generator Diesel Electric Node,   !Electric Circuit Node
        .15,                              !Min Part Load Ratio
        1.0,                              !Max Part Load Ratio
        .65,                              !Opt Part Load Ratio
        BG Shaft Power Curve,
        BG Recovery Jacket Heat Curve,
        BG Recovery Lube Heat Curve,
        BG Total Exhaust Energy Curve,
        BG Exhaust Temperature Curve,
        0.00952329, 0.9,        !UA to Capacity Ratio Coeffs        !Diesel Engine Capacity
        1.4644,                 !Maximum Exhaust Flow per KW Diesel Power Out
        150,                    !Design Min. exhaust temp.(Steam Saturation Temperature) (C)
        10700,                  ! Fuel Heating Value (W-hours/L)
        .01,                    !Design heat recovery water mass flow rate (kg/s)
        Cat Diesel Heat Rec Inlet Node, Cat Diesel Heat Rec Outlet Node;
```

```
    CURVE:QUADRATIC, BG Shaft Power Curve,
        0.09755, 0.6318, -0.4165;
    CURVE:QUADRATIC, BG Recovery Jacket Heat Curve,
         0.25,0,0;
    CURVE:QUADRATIC, BG Recovery Lube Heat Curve,
        0.15,0,0;
    CURVE:QUADRATIC, BG Total Exhaust Energy Curve,
        0.1,0,0;
    CURVE:QUADRATIC, BG Exhaust Temperature Curve,
        425,0,0;
```

Generator:Diesel Outputs

The output variables that are available for the Diesel Generator are shown:

```
HVAC, Average, Diesel Gen. Power [W]
HVAC, Sum ,Diesel Gen. Energy [J]
HVAC, Average, Diesel Gen. Jacket Heat Recovery Available [W]
HVAC, Sum, Diesel Gen. Jacket Energy Recovery Available [J]
HVAC, Average, Diesel Gen. Lube Heat Recovery Available [W]
HVAC, Sum, Diesel Gen. Lube Energy Recovery Available [J]
HVAC, Average, Diesel Gen. Exhaust Heat Recovery Available [W]
HVAC, Sum, Diesel Gen. Exhaust Energy Recovery Available [J]
HVAC, Average, Diesel Gen. Total Heat Recovery Available [W]
HVAC, Sum, Diesel Gen. Total Energy Recovery Available [J]
HVAC, Average, Diesel Gen. Fuel Energy Use Rate [J/s]
HVAC, Sum, Diesel Gen. Fuel Energy Used [J]
HVAC, Average, Diesel Gen. Fuel Used [kg/s]
HVAC, Average, Diesel Gen. Exhaust Stack Temp[C]
HVAC, Average, Diesel Gen. Heat Rec. Inlet Temp[C]
HVAC, Average, Diesel Gen. Heat Rec. Outlet Temp[C]
HVAC, Average, Diesel Gen. Heat Rec. Mass Flow [kg/s]
```

Generator:Gas Turbine

The basic gas-turbine cycle is the Brayton Cycle or open cycle, which consists of an adiabatic compression, constant pressure heating, and adiabatic expansion. The gas turbine model uses the electrical load and engine generator size to compute part-load ratios (PLR). Fuel energy input and recoverable lube oil heat are then computed. Finally, the recoverable exhaust heat is calculated.

Gas turbine generators use performance parameters to compute fuel energy consumption as a function of part-load and ambient (entering) air temperature. Recoverable fuel energy equipment, recoverable lube oil heat/fuel energy input equipment performance, total exhaust heat/fuel energy

input equipment, exhaust gas temperature/fuel energy input equipment performance parameters are all specified with a quadratic curve fit.

When the heat recovery curve fits = 0.0, this means that no heat recovery is done on the diesel generator exhaust gas; and no heat recovery is specified.

Field: Generator Name

Unique name to identify this Gas Turbine generator.

Field: Rated Power Output

The design nominal capacity of the Gas Turbine Generator in Watts [W].

Field: Electric Circuit Node

This Named node contains where the electric power is put in the program simulation for use by the electric equipment in the Load Center.

Field: Minimum Part Load Ratio

This field contains the minimum allowed operating fraction of full load.

Field: Maximum Part Load Ratio

This field contains the maximum allowed operating fraction of full load.

Field: Opt Part Load Ratio

This alpha field contains the optimal operating fraction of full load. This is the part load ratio that gives the optimal production of electric power with the least amount of fuel usage.

Field: Part Load Based Fuel Input curve

Needs the Quadratic Curve Object to be specified.

Fuel Input = a + b*PLR + c*PLR**2

PLR = Ratio of Generator Load to Rated Power Output. This curve is multiplied to the Temperature Based Fuel Input Curve to determine Fuel Energy In

Field: Temperature Based Fuel Input curve

Needs the Quadratic Curve Object to be specified.

Fuel Input = a + b*AT + c*AT**2 where: AT = Ambient Delta T

PLR = Ratio of Generator Load to Rated Power Output this curve is multiplied to the Temperature Based Fuel Input Curve to determine Fuel Energy In.

Field: Exhaust Flow curve

The Total Exhaust Energy Curve is a quadratic equation that needs to be specified by a curve fit object. Used to calculate the total exhaust heat as a function of part-load ratio.

Field: Part Load Based Exhaust Temperature curve

The Exhaust Temperature Curve is a quadratic equation that needs to be specified by a curve fit object. Used to determine the exhaust gas temperature as a function of part-load ratio.

Field: Temperature Based Exhaust Temperature curve

The Exhaust Temperature Curve is a quadratic equation that needs to be specified by a curve fit object. Used to determine the exhaust gas temperature as a function of part-load ratio.

Field: Heat Recovery Lube Energy curve

This alpha field contains the name of the Recovery Lube Heat curve. The curve itself is specified separately using a curve object (see Curve:Quadratic). The Recovery Lubricant Heat Curve is a quadratic equation that determines the ratio of recovery lube heat to fuel energy. Used to calculate the recoverable lube oil heat as a function of part-load ratio. The defining equation is:

$$RecoveryLubeHeatToFuelRatio = C_1 + C_2 RL + C_3 RL^2$$

where RL is the Ratio of Load to Rated Power Output.

UA Curve

The UA curve applies to the exhaust gas heat exchanger. The curve is an equation that determines the overall heat transfer coefficient for the exhaust gasses with the stack. The heat transfer coefficient ultimately helps determine the exhaust stack temperature. The defining equation is:

$$UAToCapacityRatio = C_1 GeneratorRatedPowerOutput^{C_2}$$

The following two fields contain the coefficients for the equation.

Field: Coefficient1 of UA curve

This numeric field contains the first coefficient for the overall heat transfer coefficient curve.

Field: Coefficient2 of UA curve

This numeric field contains the second (exponential) coefficient for the overall heat transfer coefficient curve.

Field: Maximum Exhaust Flow per KW of Power Output

Maximum exhaust flow per unit capacity for diesel engines. The parameter sets an upper limit on exhaust gas flow and exhaust gas heat recovery for diesel engines. Units: kg/sec per kW capacity

Field: Design Minimum Exhaust Temp (Steam Saturation Temperature)

This is the design engine stack saturated steam temperature in degrees C.

Field: Design Air Inlet Temperature

Design Air Inlet Temperature in degrees C.

Field: Fuel Heating Value

Heating Value of Fuel in KJ/kg

Field: Design heat recovery water mass flow rate

Design Water mass flow rate through heat recovery loop in kg/s.

Field: Heat_Recovery_Side_Inlet_Node

This alpha field contains the identifying name for the Gas Turbine generator heat recovery side inlet node.

Field: Heat_Recovery_Side_Outlet_Node

This alpha field contains the identifying name for the Gas Turbine generator heat recovery side outlet node.

```
GENERATOR:GAS TURBINE,
       \memo This generator model is the empirical model from the Building Loads
       \memo and System Thermodynamics (BLAST) program.  generator performance
       \memo curves are generated by fitting catalog data to second order
       \memo polynomial equations.  Three sets of coefficients are required.
  A1, \field Generator Name
  N1, \field Rated Power Output
  A2, \field Electric Circuit Node
  N2, \field Minimum Part Load Ratio
  N3, \field Maximum Part Load Ratio
  N4, \field Opt Part Load Ratio
  A3, \field Part Load Based Fuel Input curve
       \type object-list
       \object-list QuadraticCurve
       \note curve = a + b*PLR + c*PLR**2
       \note PLR = Ratio of Generator Load to Rated Power Output
       \note this curve is multiplied to the Temperature Based Fuel Input Curve
       \note to determine Fuel Energy In
  A4, \field Temperature Based Fuel Input curve
       \type object-list
       \object-list QuadraticCurve
       \note curve = a + b*AT + c*AT**2
       \note AT = Ambient Delta T
       \note this curve is multiplied to the Part Load Based Fuel Input Curve
       \note to determine Fuel Energy In
```

```
  A5, \field Exhaust Flow curve
       \type object-list
       \object-list QuadraticCurve
       \note curve = a + b*AT + c*AT**2
       \note AT = Ambient Delta T
  A6, \field Part Load Based Exhaust Temperature curve
       \type object-list
       \object-list QuadraticCurve
       \note curve = a + b*PLR + c*PLR**2
       \note PLR = Ratio of Generator Load to Rated Power Output
       \note this curve is multiplied to the Temperature Based Exhaust Temperature Curve
       \note to determine Exhaust Temperature
  A7, \field Temperature Based Exhaust Temperature curve
       \type object-list
       \object-list QuadraticCurve
       \note curve = a + b*AT + c*AT**2
       \note AT = Ambient Delta T
       \note this curve is multiplied to the Part Load Based Exhaust Temperatuer Curve
       \note to determine Exhaust Temperature
  A8, \field Heat Recovery Lube Energy curve
       \type object-list
       \object-list QuadraticCurve
       \note curve = a + b*PLR + c*PLR**2
       \note PLR = Ratio of Generator Load to Rated Power Output
  N5, \field Coefficient1 of UA curve
            \note curve = C1 * Rated Power Output**C2
  N6, \field Coefficient2 of UA curve
             \note curve = C1 * Rated Power Output**C2
  N7, \field Maximum Exhaust Flow per KW of Power Output
       \units
  N8, \field Design Minimum Exhaust Temp (Steam Saturation Temperature)
       \units C
  N9, \field Design Air Inlet Temperature
       \units C
  N10, \field Fuel Heating Value
       \units
  N11, \field Design heat recovery water mass flow rate
       \units kg/s
  A9 , \field Heat_Recovery_Side_Inlet_Node
  A10 ;\field Heat_Recovery_Side_Outlet_Node
```

And, an IDF example showing how it is used:

```
GENERATOR:GAS TURBINE, Solar Turbine,
        30000,                          !Rated Power Output
        GT gen Electric Node,           !Electric Circuit Node
        .15,                            !Min Part Load Ratio
        1.0,                            !Max Part Load Ratio
        .65,                            !Opt Part Load Ratio
        BG PL Based Fuel Input Curve,
        BG Temp Based Fuel Input Curve,
        BG Exhaust Flow Curve,
        BG PL Based Exhaust Temp Curve,
        BG Temp Based Exhaust Temp Curve,
        BG Tur Recovery Lube Heat Curve,
        0.01907045, 0.9,                !UA Coeffs
        11.72,
        25,                             !Maximum Exhaust Flow per KW Diesel Power Out
        150,                            !Design Steam Saturation Temperature (C)
        10700,                          !Fuel Heating Value (W-hours/L)
        .01,                            !Design heat recovery water mass flow rate (kg/s)
        Solar Turbine Heat Rec Inlet Node, Solar Turbine Heat Rec Outlet Node;
```

```
CURVE:QUADRATIC,  BG PL Based Fuel Input Curve,
     9.41, -9.48, 4.32;
CURVE:QUADRATIC,  BG Temp Based Fuel Input Curve,
    1.0044, -0.0008, 0;
CURVE:QUADRATIC, BG Exhaust Flow Curve,
     0.05, 0.0,0.0;
CURVE:QUADRATIC,  BG PL Based Exhaust Temp Curve,
     450,0,0;
CURVE:QUADRATIC,  BG Temp Based Exhaust Temp Curve,
      1.005, 0.0018, 0;
CURVE:QUADRATIC,  BG Tur Recovery Lube Heat Curve,
      0.223, -0.4, 0.2286;
```

Generator:Gas Turbine Outputs

The output variables that are available for the Gas Turbine Generator are shown:

```
HVAC,Average,GT Gen. Power[W]
HVAC,Sum,GT Gen. Energy[J]
HVAC,Average,GT Gen. Exhaust Heat Recovered [W]
HVAC,Sum,GT Gen. Exhaust Energy Recovered [J]
HVAC,Average,GT Gen. Lube Heat Recovered [W]
HVAC,Sum,GT Gen. Lube Energy Recovered [J]
HVAC,Average,GT Gen. Total Heat Recovered [W]
HVAC,Sum,GT Gen. Total Energy Recovered [J]
HVAC,Average,GT Gen. Fuel Energy Use rate [J/s or W?]
HVAC,Sum,GT Gen. Fuel Energy Used[J]
HVAC,Average,GT Gen. Fuel Used[kg/s]
HVAC,Average,GT Gen. Exhaust Stack Temp[C]
HVAC,Average,GT Gen. Heat Rec. Inlet Temp[C]
HVAC,Average,GT Gen. Heat Rec. Outlet Temp[C]
HVAC,Average,GT Gen. Heat Rec. Mass Flow [kg/s]
```

Group – Performance Curves

This group of objects consists of polynomial curves which are used to characterize the performance of HVAC equipment. The curves are input, stored, and evaluated entirely within the CurveManager module. The curves are usually derived from fits or regressions to data covering a limited range. Results for independent variable values outside this range are likely to be invalid, so curve input always contains a range of validity (maximum and minimum permitted values) for each independent variable. No error or warning message is issued if an independent variable is outside the range. Instead, the curve manager uses the minimum value if an independent variable is less than the minimum, and the maximum if a variable exceeds the maximum.

Curve:Quadratic

Input for a quadratic curve consists of the curve name, the three coefficients, and the maximum and minimum valid independent variable values. The Input Data Dictionary description is shown below.

Field: Name

A user assigned unique name for an instance of a quadratic curve. When a curve is used, it is referenced by this name.

Field: Coeff1

The constant coefficient (C_1) in the equation: $y = C_1 + C_2 \cdot x + C_3 \cdot x^2$

Field: Coeff2

The linear coefficient (C_2) in the equation: $y = C_1 + C_2 \cdot x + C_3 \cdot x^2$

Field: Coeff3

The quadratic coefficient (C_3) in the equation: $y = C_1 + C_2 \cdot x + C_3 \cdot x^2$

Field: minimum value of x

The minimum allowable value of x. Values of x less than the minimum will be replaced by the minimum.

Field: maximum value of x

The maximum allowable value of x. Values of x greater than the maximum will be replaced by the maximum.

```
CURVE:QUADRATIC,
  A1 , \field Name
       \type alpha
       \reference QuadraticCurves
       \note curve = C1 + C2*x + C3*x**2
  N1 , \field Coeff1
       \type real
  N2 , \field Coeff2
       \type real
  N3 , \field Coeff3
       \type real
  N4 , \field minimum value of x
       \type real
  N5 ; \field maximum value of x
       \type real
```

Following is an example input.

```
CURVE:QUADRATIC,
       WindACCBFFFF, ! name
       -2.277,       ! coeff1
       5.2114,       ! coeff2
       -1.9344,      ! coeff3
       0.0,          ! min
       1.0;          ! max
```

Curve:Cubic

Input for a cubic curve consists of the curve name, the 4 coefficients, and the maximum and minimum valid independent variable values. The Input Data Dictionary description is shown below.

Field: Name

A user assigned unique name for an instance of a cubic curve. When a curve is used, it is referenced by this name.

Field: Coeff1

The constant coefficient (C_1) in the equation: $y = C_1 + C_2 \cdot x + C_3 \cdot x^2 + C_4 \cdot x^3$

Field: Coeff2

The linear coefficient (C_2) in the equation: $y = C_1 + C_2 \cdot x + C_3 \cdot x^2 + C_4 \cdot x^3$

Field: Coeff3

The quadratic coefficient (C_3) in the equation: $y = C_1 + C_2 \cdot x + C_3 \cdot x^2 + C_4 \cdot x^3$

Field: Coeff4

The cubic coefficient (C_4) in the equation: $y = C_1 + C_2 \cdot x + C_3 \cdot x^2 + C_4 \cdot x^3$

Field: minimum value of x

The minimum allowable value of x. Values of x less than the minimum will be replaced by the minimum.

Field: maximum value of x

The maximum allowable value of x. Values of x greater than the maximum will be replaced by the maximum.

```
CURVE:CUBIC,
  A1 , \field Name
       \type alpha
       \reference CubicCurves
       \note curve = C1 + C2*x + C3*x**2 + C4*x**3
  N1 , \field Coeff1
       \type real
  N2 , \field Coeff2
       \type real
  N3 , \field Coeff3
       \type real
  N4 , \field Coeff4
       \type real
  N5 , \field minimum value of x
       \type real
  N6 ; \field maximum value of x
       \type real
```

Following is an input example.

```
CURVE:CUBIC,
       WindACEIRFPLF, ! name
       .00000273404,  ! coeff1
       1.05259,       ! coeff2
       -.0552087,     ! coeff3
       .00262236,     ! coeff4
       0.0, ! min
       1.1; ! max
```

Curve:Biquadratic

This curve is a function of two independent variables. Input consists of the curve name, the six coefficients, and min and max values for each of the independent variables. The following shows the Input Data Dictionary definition of the object.

Field: Name

A user assigned unique name for an instance of a biquadratic curve. When a curve is used, it is referenced by this name.

Field: Coeff1

The constant coefficient (C_1) in the equation: $z = C_1 + C_2 \cdot x + C_3 \cdot x^2 + C_4 \cdot y + C_5 \cdot y^2 + C_6 \cdot x \cdot y$

Field: Coeff2

The coefficient C_2 in the equation: $z = C_1 + C_2 \cdot x + C_3 \cdot x^2 + C_4 \cdot y + C_5 \cdot y^2 + C_6 \cdot x \cdot y$

Field: Coeff3

The coefficient C_3 in the equation: $z = C_1 + C_2 \cdot x + C_3 \cdot x^2 + C_4 \cdot y + C_5 \cdot y^2 + C_6 \cdot x \cdot y$

Field: Coeff4

The coefficient C_4 in the equation: $z = C_1 + C_2 \cdot x + C_3 \cdot x^2 + C_4 \cdot y + C_5 \cdot y^2 + C_6 \cdot x \cdot y$

Field: Coeff5

The coefficient C_5 in the equation: $z = C_1 + C_2 \cdot x + C_3 \cdot x^2 + C_4 \cdot y + C_5 \cdot y^2 + C_6 \cdot x \cdot y$

Field: Coeff6

The coefficient C_6 in the equation: $z = C_1 + C_2 \cdot x + C_3 \cdot x^2 + C_4 \cdot y + C_5 \cdot y^2 + C_6 \cdot x \cdot y$

Field: minimum value of x

The minimum allowable value of x. Values of x less than the minimum will be replaced by the minimum.

Field: maximum value of x

The maximum allowable value of x. Values of x greater than the maximum will be replaced by the maximum

Field: minimum value of y

The minimum allowable value of y. Values of y less than the minimum will be replaced by the minimum

Field: maximum value of y

The maximum allowable value of y. Values of y greater than the maximum will be replaced by the maximum

```
CURVE:BIQUADRATIC,
  A1 , \field Name
       \type alpha
       \reference BiquadraticCurves
       \note curve = C1 + C2*x + C3*x**2 + C4*y + C5*y**2 + C6*x*y
  N1 , \field Coeff1
       \type real
  N2 , \field Coeff2
       \type real
  N3 , \field Coeff3
       \type real
  N4 , \field Coeff4
       \type real
  N5 , \field Coeff5
       \type real
  N6 , \field Coeff6
       \type real
  N7 , \field minimum value of x
       \type real
  N8 , \field maximum value of x
       \type real
  N9 , \field minimum value of y
       \type real
  N10; \field maximum value of y
       \type real
```

Below is an example input.

```
CURVE:BIQUADRATIC,
       WindACCoolCapFT, ! name
       0.942587793,     ! coeff1
       0.009543347,     ! coeff2
       0.000683770,     ! coeff3
       -0.011042676,    ! coeff4
       0.000005249,     ! coeff5
       -0.000009720,    ! coeff6
       15., 22., ! min and max of first independent variable
       29., 47.; ! min and max of second independent variable
```

Group – Fluid Properties

The Fluid Property routines in EnergyPlus have been designed for ease of use and to allow users to add refrigerants to the input file without having to make any changes to the program code. The only requirement on input is that in order to add a new refrigerant, a user must enter a full set of data. The same is true for the "standard" fluids that are available with the initial implementation of fluid properties—the full set of data must be available to the program in order for the fluid to be used. As with all EnergyPlus input, the fluid properties data has both an input data description and a complete reference data set that must show up in the input file. Below is the description of the input data description syntax for the fluid properties entries.

The first syntax item lists all of the fluids present in an input file and categorizes them as either a refrigerant (such as R11, R12, etc.) or a glycol (such as ethylene glycol, propylene glycol, etc.). A refrigerant or glycol must show up in this list in order to used as a valid fluid in the various loops in the input file.

FluidNames

Field Set (Name and Type) up to 10 sets

Field: Fluid Name

Each fluid name is a unique identifier that will be used in conjunction with the data statements described later in this section. The fluid name is also used in the loop descriptions. This list is simply a list of available fluids. Each fluid name must be identified by type.

Field: Fluid Type

The choice for fluid type is either REFRIGERANT or GLYCOL. This designation determines what type of data EnergyPlus expects to be found for the fluid name. If the fluid name is defined as a REFRIGERANT, the user must supply valid data for enthalpy, specific heat, and density in the saturated region and enthalpy and density in the superheated region. This will also require valid temperature lists as described later in this section. If the fluid name is defined as a GLYCOL, the user must supply valid data for specific heat at various concentrations (percentage of non-water liquid). As with REFRIGERANT fluid types, a GLYCOL also requires valid temperature lists.

```
FluidNames,
       \unique-object
       \memo list of potential fluid names/types in the input file, max of 10
  A1,  \field fluid name 1
       \type alpha
  A2,  \field type of fluid for fluid name 1
       \type choice
       \key REFRIGERANT
       \key GLYCOL
  A3,  \field fluid name 2
       \type alpha
  A4,  \field type of fluid for fluid name 2
       \type choice
       \key REFRIGERANT
       \key GLYCOL
  . . . same thing repeated over and over again . . .
  A19, \field fluid name 10
       \type alpha
  A20; \field type of fluid for fluid name 10
       \type choice
       \key REFRIGERANT
       \key GLYCOL
```

An example of this statement in an input data file is:

```
FluidNames,
  R11, REFRIGERANT,
  R12, REFRIGERANT,
  R22, REFRIGERANT,
  NH3, REFRIGERANT,
  Steam, REFRIGERANT,
  EthyleneGlycol, GLYCOL,
  PropyleneGlycol, GLYCOL;
```

FluidPropertyTemperatures

It is assumed that all fluid properties vary with temperature. As a result, the following syntax allows the user to list the temperatures at which the data points are valid. Since in many cases, the temperatures will be similar, this provides a more compact input structure and avoids listing the temperatures multiple times. The name associated with the temperature list is the piece of information that will allow the actual fluid property data statements to refer back to or link to the temperatures. Up to 250 points may be entered with this syntax and temperatures must be entered in ascending order. Units for the temperatures are degrees Celsius. The same temperature list may be used by more than one refrigerant or for refrigerants and glycols.

Field: Temperature List Name

This field is simply an identifying name that links the list of temperatures to a specific list of data for fluid thermal properties. A single temperature list can be used for more than one thermal property or fluid. For example, the same temperature list can be used for the superheated enthalpy of a refrigerant and the specific heat of a glycol if appropriate.

Field(s) 1-250: Temperature

These fields (up to 250) are the temperatures at which the data for the thermal properties are to be expected. Temperatures are assumed to be in ascending order in units of Celsius. The list of temperatures is terminated simply with a semi-colon rather than entering numerous “blanks” between commas.

```
FluidPropertyTemperatures,
      \memo property values for fluid properties
      \memo list of up to 250 temperatures, note that number of property
      \memo values must match the number of properties
      \memo in other words, there MUST be a one-to-one correspondance between
      \memo the property values in this list and
      \memo the actual properties list in other syntax
      \units degrees C (for all temperature inputs)
  A1, \field temperature list name
      \type alpha
  N1, \field temperature 1
      \type real
  N2, \field temperature 2
      \type real
  . . . same thing repeated over and over again . . .
  N250; \field temperature 250
        \type real
```

An example of this statement in an input data file is:

```
FluidPropertyTemperatures,
      R11Temperatures,
      -70,-65,-60,-55,-50,-45,-40,-35,-30,-25,-20,-15,-10,-5,0,2,4,6,8,10,12,
      14,16,18,20,22,24,26,28,30,32,34,36,38,40,42,44,46,48,50,55,60,65,70,
      75,80,85,90,95,100,105,110,115,120,125,130,135,140,145,150,155,160,
      165,170,175,180,185,190,198;
```

Refrigerant Fluid Type

A full data set for a refrigerant fluid type in EnergyPlus includes: one or more temperature lists, lists of values for enthalpy, density, and specific heat in the saturated region (fluid values and gas to fluid difference values), and lists of values for enthalpy and density at corresponding pressure values in the superheated region. The syntax lines for the property value lists are described below.

FluidPropertySaturated

Property data for the saturated region is entered with the following syntax. Before the actual data is entered, this line of input must identify the refrigerant the data is to be associated with, what the data represents (choice of one of three keywords), the phase of the data (either fluid or the difference between fluid and gas), and the temperature list reference that links each data point with a temperature.

Field: Fluid Name

This name identifies the fluid for which data follows in the remaining syntax. This fluid name must show up in the fluid names list (ref: FluidNames) as a REFRIGERANT.

Field: Fluid Property Type

This field identifies the fluid property for which data is being entered with this statement. The options for the saturated region are ENTHALPY, DENSITY, and SPECIFICHEAT. The units for these properties are J/kg, kg/m^3, and J/kg-K, respectively.

Field: Fluid Phase

In the saturated region, each property has two values: one for the liquid state and one for the gaseous state. An alternative to either of these values is the difference between the value at the liquid and gaseous states. EnergyPlus requires data for the fluid properties in the liquid state (FLUID) and the difference between the gaseous and liquid values (FLUIDGAS). One of these two identifiers must be entered to distinguish one set of data from the other.

Field: Temperatures List Name

This name refers back to a list of temperatures (ref: FluidPropertyTemperatures). Each temperature in the temperature list corresponds to a data item found in the remaining fields of this syntax. The first temperature in the temperature list corresponds to the first fluid property value, the second temperature in the temperature list corresponds to the second fluid property value, etc.

Field(s) 1-250: Fluid Property Value

These fields (up to 250) are the values of the thermal property specified in the fluid property type field for the phase specified in the fluid phase field. The temperature list specified in the temperature list name field links the data with the corresponding temperatures.

```
FluidPropertySaturated,
      \memo fluid properties for the saturated region
  A1, \field fluid name (R11, R12, etc.)
      \reference FluidNames
  A2, \field fluid property type
      \note ENTHALPY Units are J/kg
      \note DENSITY Units are kg/m3
      \note SPECIFICHEAT Units are J/kg-K
      \type choice
      \key ENTHALPY     ! Units are J/kg
      \key DENSITY      ! Units are kg/m3
      \key SPECIFICHEAT ! Units are J/kg-K
  A3, \field fluid phase
      \type choice
      \key FLUID        ! saturated fluid
      \key FLUIDGAS     ! difference between saturated fluid and sat vapor
  A4, \field temperatures list name
      \reference FluidPropertyTemperatures
  N1, \field property value 1
      \type real
  N2, \field property value 2
      \type real
  . . . same thing repeated over and over again . . .
  N250; \field property value 250
        \type real
```

An example of this statement in an input data file is:

```
FluidPropertySaturated,
      R11,ENTHALPY,FLUID,R11Temperatures, ! Enthalpy in J/kg
      153580,154600,156310,158580,161300,164380,167740,171330,175100,179020,183060,
      187190,191400,195680,200000,201740,203490,205240,207000,208770,210530,212310,
      214080,215870,217650,219860,221230,223030,224830,226630,228860,230250,232060,
      233860,235700,237520,239350,241180,243010,246350,249450,254080,258730,263480,
      268110,272860,277000,282410,287240,292120,297030,302000,307090,312080,317210,
      322400,327670,333020,338460,344010,349680,355500,361480,367690,374100,381060,
      388850,397280,426300;
```

FluidPropertySuperheated

The format of the data for the superheated region is almost identical to that of the saturated region with one addition—a pressure. The pressure is listed before the rest of the data and has units of Pa. While there are only two lines associated with a particular property in the saturated region (one for the fluid value and one for the difference between gas and fluid), it is possible to have numerous lines of data for the superheated region—one for each pressure value.

Field: Fluid Name

This name identifies the fluid for which data follows in the remaining syntax. This fluid name must show up in the fluid names list (ref: FluidNames) as a REFRIGERANT.

Field: Fluid Property Type

This field identifies the fluid property for which data is being entered with this statement. The options for the superheated region are ENTHALPY and DENSITY. The units for these properties are J/kg and kg/m^3, respectively.

Field: Temperatures List Name

This name refers back to a list of temperatures (ref: FluidPropertyTemperatures). Each temperature in the temperature list corresponds to a data item found in the remaining fields of this syntax. The first temperature in the temperature list corresponds to the first fluid property value, the second temperature in the temperature list corresponds to the second fluid property value, etc.

Field: Pressure

In the superheated region, each property is a function of two state values: temperature and one other property. It is most convenient to make other properties a function of temperature and pressure. Thus, a pressure must be listed for the values that follow. The units for pressure are Pascals (Pa). Lists of properties are various pressures and temperatures form a two-dimensional table from which EnergyPlus interpolates to find the property value at a specified temperature and pressure.

Field(s) 1-250: Fluid Property Value

These fields (up to 250) are the values of the thermal property specified in the fluid property type field for the phase specified in the fluid phase field. The temperature list specified in the temperature list name field links the data with the corresponding temperatures.

```
FluidPropertySuperheated,
      \memo fluid properties for the saturated region
  A1, \field fluid name (R11, R12, etc.)
      \reference FluidNames
  A2, \field fluid property type
      \type choice
      \note ENTHALPY Units are J/kg
      \note DENSITY Units are kg/m3
      \note SPECIFICHEAT Units are J/kg-K (Currently this data is not used, entered, or expected)
      \type choice
      \key ENTHALPY     ! Units are J/kg
      \key DENSITY      ! Units are kg/m3
      \key SPECIFICHEAT ! Units are J/kg-K (Currently this data is not used, entered, or expected)
  A3, \field temperatures list name
      \reference FluidPropertyTemperatures
  N1, \field pressure
      \memo pressure for this list of properties
      \type real
      \units Pa
      \minimum> 0.0
  N2, \field property value 1
      \type real
  N3, \field property value 2
      \type real
  . . . same thing repeated over and over again . . .
  N251; \field property value 250
        \type real
```

An example of this statement in an input data file is:

```
FluidPropertySuperheated,
    R11,DENSITY,SuperR11Temperatures, ! Density in kg/m^3
    62000., !Pressure = 62000Pa
    0,0,0,0,0,0,0,0.0139,0.0134,0.0129,0.0124,0.012,0.0116,0.0112,0.0109,0.0105,
    0.0102,0.0099,0.0097,0.0094,0.0092,0.0089,0,0,0,0,0,0,0,0,0,0;
```

Glycol Fluid Type

A full data set for a glycol fluid type in EnergyPlus includes: a temperature list and lists of values for specific heat at various concentrations. The syntax lines for the property value lists are described below.

FluidPropertyConcentration

The format of the data for the glycols is almost identical to that of the superheated region for REFRIGERANT fluids with one exception—concentration replaces pressure. The concentration is listed before the rest of the data and is dimensionless. Note that glycol solutions are assumed to exist in liquid form only in EnergyPlus. Note that temperature lists as described above are still necessary. Note also that liquid water may be entered as a "glycol" with two input lines for each property (one at 0.0 concentration and one at 1.0 concentration—both with the same property data).

Field: Fluid Name

This name identifies the fluid for which data follows in the remaining syntax. This fluid name must show up in the fluid names list (ref: FluidNames) as a GLYCOL.

Field: Fluid Property Type

This field identifies the fluid property for which data is being entered with this statement. The only current option for glycols is SPECIFICHEAT with units of J/kg-K.

Field: Temperatures List Name

This name refers back to a list of temperatures (ref: FluidPropertyTemperatures). Each temperature in the temperature list corresponds to a data item found in the remaining fields of this syntax. The first temperature in the temperature list corresponds to the first fluid property value, the second temperature in the temperature list corresponds to the second fluid property value, etc.

Field: Concentration

For glycols, thermal properties are a function of two state values: temperature and concentration (dimensionless). Thus, a concentration must be listed for the values of specific heat that follow. Lists of properties are various concentrations and temperatures form a two-dimensional table from which EnergyPlus interpolates to find the property value at a specified temperature and concentration.

Field(s) 1-250: Fluid Property Value

These fields (up to 250) are the values of the thermal property specified in the fluid property type field for the phase specified in the fluid phase field. The temperature list specified in the temperature list name field links the data with the corresponding temperatures.

```
FluidPropertyConcentration,
      \memo fluid properties for water/other fluid mixtures
  A1, \field fluid name (ethylene glycol, etc.)
      \reference FluidNames
  A2, \field fluid property type
      \type choice
      \note ENTHALPY Units are J/kg (Currently this data is not used, entered, or expected)
      \note DENSITY Units are kg/m3 (Currently this data is not used, entered, or expected)
      \note SPECIFICHEAT Units are J/kg-K
      \type choice
      \key ENTHALPY     ! Units are J/kg  (Currently this data is not used, entered, or expected)
      \key DENSITY      ! Units are kg/m3 (Currently this data is not used, entered, or expected)
      \key SPECIFICHEAT ! Units are J/kg-K
  A3, \field temperatures list name
      \reference FluidPropertyTemperatures
  N1, \field concentration
      \memo glycol concentration for this list of properties
      \type real
      \units percentage (as a real decimal)
      \minimum 0.0
      \maximum 1.0
  N2, \field property value 1
      \type real
  N3, \field property value 2
      \type real
  . . . same thing repeated over and over again . . .
  N251; \field property value 250
        \type real
```

An example of this statement in an input data file is:

```
FluidPropertyConcentration,
     PropyleneGlycol,SPECIFICHEAT ,GlycolTemperatures, ! Spec. heat in J/kg-K
     0.8, ! Concentration
     2572,2600,2627,2655,2683,2710,2738,2766,2793,2821,2849,2876,2904,2931,2959,
     2987,3014,3042,3070,3097,3125,3153,3180,3208,3236,3263,3291,3319,3346,3374,
     3402,3429,3457;
```

Input for Output

Several items are used to specify what will appear in the output file(s). The output is described in the next section of this document.

Group – Report

Report

Several reports have been installed in EnergyPlus. They are accessed by the Report object.

```
Report,
  A1 , \field Type_of_Report
       \type choice
       \key Variable Dictionary
       \key Surfaces
       \key Construction
  A2 ; \field Name_of_Report
       \note only applicable to key=Surfaces
       \type choice
       \key DXF
       \key LINES
```

Field: Type_of_Report

Currently there are three values which satisfy this alpha field: Surfaces, Construction, and Variable Dictionary. These are described in the paragraphs following the Name_of_Report field.

Field: Name_of_Report

This alpha field is only used for the "Surface" type report and can be either DXF or Lines. These reports are described in the next few paragraphs.

Type_of_Report = Surfaces

Surfaces can be reported in several ways:

```
Report, Surfaces, DXF;
```

The above IDF specification will produce a DXF file (**eplusout.dxf**) of the surfaces in the IDF file. Several software programs can render this file into something viewable. For example:

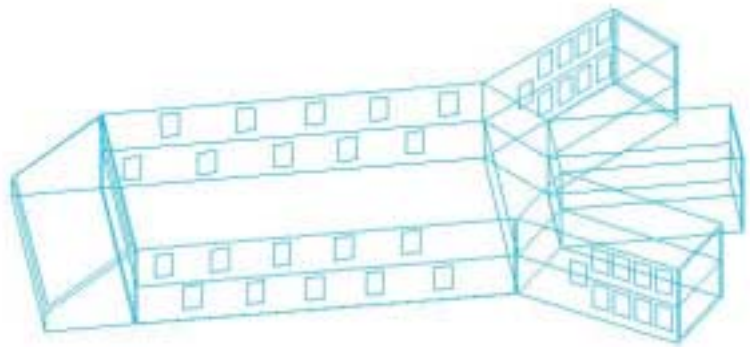

Figure 40. Example building from DXF report.

```
Report, Surfaces, lines;
```

The above IDF line will produce a simple file of line segments that constitute the surfaces in the IDF file.

The following shows an excerpt of "lines" report (**eplusout.sln**) for a single surface. It gives the coordinates in the "standard" EnergyPlus fashion (that is, UpperLeftCorner first and proceeding around, in this case, the four vertices in the surface.

```
      0.00,      0.00,      4.57,      0.00,      0.00,      0.00
      0.00,      0.00,      0.00,     15.24,      0.00,      0.00
     15.24,      0.00,      0.00,     15.24,      0.00,      4.57
     15.24,      0.00,      4.57,      0.00,      0.00,      4.57
```

Type_of_Report = Variable Dictionary

This report (**eplusout.rdd**) may be necessary before you can ask for specific output variables. Variables available, to some extent, depend on the simulation input. Variables are "set up" during the initial "get input" processing done within the modules. Therefore, an item that is specific to a certain type of coil would not be available if that coil were not used during the simulation. This command will produce a list of variables available for reporting.

```
Report, Variable Dictionary;
```

An example of the results:

```
Program Version,EnergyPlus, Version 1.0, Beta 5
 Var Type,Var Report Type,Variable Name [Units]
Zone,Average,Outdoor Dry Bulb [C]
Zone,Average,Outdoor Barometric Pressure [Pa]
Zone,Average,Outdoor Wet Bulb [C]
Zone,Average,Outdoor Humidity Ratio [kgWater/kgAir]
Zone,Average,Wind Speed [m/s]
Zone,Average,Wind Direction [degree]
Zone,Average,Sky Temperature [C]
Zone,Average,Diffuse Solar [W/m2]
Zone,Average,Direct Solar [W/m2]
```

```
Zone,Average,Ground Reflected Solar [W/m2]
Zone,Average,Ground Temperature [C]
Zone,Average,Outdoor Dew Point [C]
Zone,Average,Outdoor Enthalpy [J/kg]
Zone,Average,Outdoor Relative Humidity [%]
Zone,Average,Outdoor Air Density [kg/m3]
Zone,Average,Zone Transmitted Solar[W]
Zone,Average,Surface Ext Sunlit Area [m2]
Zone,Average,Surface Ext Sunlit Fraction []
Zone,Average,Surface Ext Solar Incident[W/m2]
Zone,Average,Window Solar Absorbed:All Glass Layers[W]
Zone,Average,Window Transmitted Solar[W]
Zone,Average,Surface Inside Temperature[C]
Zone,Average,Surface Outside Temperature[C]
Zone,Average,Surface Int Convection Coeff[W/m2-K]
Zone,Average,Surface Ext Convection Coeff[W/m2-K]
Zone,Average,Window Shading Status []
Zone,Average,SUMHAT[J]
Zone,Average,Mean Radiant Temperature[C]
Zone,Sum,Zone-Total Latent Gain[J]
Zone,Sum,Zone-Total Radiant Heat Gain[J]
Zone,Sum,Zone-Total Convective Heat Gain[J]
Zone,Sum,Zone-Total Lost Heat Gain[J]
Zone,Sum,Zone-Total Electric Consumption[J]
Zone,Sum,Zone-Total Visible Heat Gain[J]
Zone,Average,People-Number of Occupants[]
Zone,Sum,People-Radiant Heat Gain[J]
Zone,Sum,People-Convective Heat Gain[J]
Zone,Sum,People-Sensible Heat Gain[J]
Zone,Sum,People-Latent Heat Gain[J]
Zone,Sum,Lights-Return Air Heat Gain[J]
Zone,Sum,Lights-Radiant Heat Gain[J]
Zone,Sum,Lights-Convective Heat Gain[J]
Zone,Sum,Lights-Visible Heat Gain[J]
Zone,Sum,Lights-Total Heat Gain[J]
Zone,Meter,Electricity:Facility [J]
Zone,Meter,Electricity:Building [J]
Zone,Meter,Electricity:Zone:RESISTIVE ZONE [J]
Zone,Meter,Electricity:Zone:EAST ZONE [J]
Zone,Meter,Electricity:Zone:NORTH ZONE [J]
Zone,Meter,GeneralLights:Electricity [J]
Zone,Meter,GeneralLights:Electricity:Zone:RESISTIVE ZONE [J]
Zone,Meter,GeneralLights:Electricity:Zone:EAST ZONE [J]
Zone,Meter,GeneralLights:Electricity:Zone:NORTH ZONE [J]
Zone,Sum,Lights-Electric Consumption[J]
Zone,Sum,Electric Eq-Total Heat Gain[J]
Zone,Sum,Electric Eq-Radiant Heat Gain[J]
Zone,Sum,Electric Eq-Convective Heat Gain[J]
Zone,Sum,Electric Eq-Latent Heat Gain[J]
Zone,Sum,Electric Eq-Lost Heat Gain[J]
Zone,Meter,ZoneSource:Electricity [J]
Zone,Sum,Electric Eq-Consumption[J]
Zone,Average,Mean Air Temperature[C]
HVAC,Sum,Zone/Sys Sensible Heating Energy[J]
HVAC,Sum,Zone/Sys Sensible Cooling Energy[J]
HVAC,Average,Zone/Sys Sensible Heating Rate[W]
HVAC,Average,Zone/Sys Sensible Cooling Rate[W]
HVAC,Average,Zone/Sys Air Temp[C]
HVAC,Average,Zone Air Humidity Ratio[]
HVAC,Sum,HVACManage Iterations
HVAC,Sum,Direct Air Sensible Heating Energy[J]
HVAC,Sum,Direct Air Sensible Cooling Energy[J]
HVAC,Average,Direct Air Sensible Heating Rate[W]
HVAC,Average,Direct Air Sensible Cooling Rate[W]
HVAC,Sum,Baseboard Energy[J]
HVAC,Average,Baseboard Rate[W]
HVAC,Sum,Max SimAir Iterations
HVAC,Average,Fan Power[W]
HVAC,Average,Fan Delta Temp[C]
HVAC,Sum,Fan Energy[J]
HVAC,Sum,Total Water Coil Energy[J]
```

```
HVAC,Sum,Sensible Water Coil Energy[J]
HVAC,Average,Total Water Coil Rate[W]
HVAC,Average,Sensible Water Coil Rate[W]
HVAC,Average,Plant Loop Cooling Demand[W]
HVAC,Average,Plant Loop Heating Demand[W]
HVAC,Average,Plant Loop InletNode Flowrate[kg/s]
HVAC,Average,Plant Loop InletNode Temperature[C]
HVAC,Average,Plant Loop OutletNode Temperature[C]
HVAC,Average,Debug Unmet Plant Loop Demand[W]
HVAC,Average,Debug Plant Loop RemDemand[W]
HVAC,Average,Debug Plant Loop Bypass Fraction
HVAC,Average,Debug SSInletNode Flowrate[kg/s]
HVAC,Average,Debug SSInletNode Temperature[C]
HVAC,Average,Debug SSOutletNode Flowrate[kg/s]
HVAC,Average,Debug SSOutletNode Temperature[C]
HVAC,Sum,Variable Speed Pump Energy[J]
HVAC,Average,Variable Speed Pump Power[W]
HVAC,Average,Variable Speed Pump Shaft Power[W]
HVAC,Average,Variable Speed Pump Heat To Fluid[W]
HVAC,Average,Variable Speed Pump Outlet Temp[C]
HVAC,Average,Variable Speed Pump Mass Flow Rate[kg/s]
HVAC,Sum,Chiller Energy[J]
HVAC,Average,Chiller Evap Heat Trans Rate[W]
HVAC,Sum,Chiller Evap Heat Trans [J]
HVAC,Average,Chiller Evap Water Inlet Temp[C]
HVAC,Average,Chiller Evap Water Outlet Temp[C]
HVAC,Average,Chiller Evap Water mass flow rate[kg/s]
HVAC,Average,Chiller Cond Heat Trans Rate[W]
HVAC,Sum,Chiller Cond Heat Trans [J]
HVAC,Average,Chiller Cond Water Inlet Temp[C]
HVAC,Average,Chiller Cond Water Outlet Temp[C]
HVAC,Average,Chiller Cond Water mass flow rate[kg/s]
HVAC,Average,Chiller Power[W]
HVAC,Sum,Purchased Chilled Water Energy[J]
HVAC,Average,Purchased Chilled Water Rate[W]
HVAC,Average,Purchased Cooling Rate[W]
HVAC,Average,Purchased Cooling Inlet Temp[C]
HVAC,Average,Purchased Cooling Outlet Temp[C]
HVAC,Average,Purchased Cooling Mass Flow Rate[kg/s]
HVAC,Sum,Purchased Hot Water Energy[J]
HVAC,Average,Purchased Hot Water Rate[W]
HVAC,Average,Purchased Heating Rate[W]
HVAC,Average,Purchased Heating Inlet Temp[C]
HVAC,Average,Purchased Heating Outlet Temp[C]
HVAC,Average,Purchased Heating Mass Flow Rate[kg/s]
HVAC,Average,Condenser Loop Inlet Temperature [C]
HVAC,Average,Condenser Loop Outlet Temperature [C]
HVAC,Average,Condenser Loop Bypass Fraction
HVAC,Average,Single-Speed Tower Water Inlet Temp[C]
HVAC,Average,Single-Speed Tower Water Outlet Temp[C]
HVAC,Average,Single-Speed Tower Water Mass Flow Rate[kg/s]
HVAC,Average,Single-Speed Tower Heat Transfer[W]
HVAC,Average,Single-Speed Tower Fan Electric Power[W]
HVAC,Sum,Single-Speed Tower Fan Electric Consumption[J]
HVAC,Average,System Node Temp[C]
HVAC,Average,System Node MassFlowRate[kg/s]
HVAC,Average,System Node Humidity Ratio
Zone,Average,FangerPMV
Zone,Average,PiercePMVET
Zone,Average,PiercePMVSET
Zone,Average,PierceDISC
Zone,Average,PierceTSENS
Zone,Average,KsuTSV
```

"**Zone**" variables are calculated and can be reported after each Zone/Heat Balance timestep (ref: TimeSteps in Hour command). "**HVAC**" variables are calculated and can be reported with each variable HVAC timestep. "Average" variables will be averaged over the time interval being reported whereas "sum" variables are summed over that time interval.

Type_of_Report = Constructions

This is one of the reports that will appear in the "**eplusout.eio**" file. It will show the calculated conduction transfer functions for each construction.

```
Report,Constructions;
```

And the example output:

```
! <Construction>,Construction Name,#Layers,#CTFs,Thermal Conductance {w/m2-K},
!OuterThermalAbsorptance,InnerThermalAbsorptance,OuterSolarAbsorptance,InnerSolarAbsorptance,Roughness
! <Material>,Material Name,Thickness {m},Conductivity {w/m-K},Density {kg/m3},
!Specific Heat {J/kg-K},Resistance {m2-K/w}
! <CTF>,Time,Outside,Cross,Inside,Flux (except final one)
 Construction,R13WALL,   1,   1,   0.900,   0.900,   0.750,   0.750,Rough
 Material,R13LAYER,  0.0000,     0.000E+00,      0.000,        0.000,       2.291
 CTF,   1,       0.0000000    ,       0.0000000    ,       0.0000000    ,       0.0000000
 CTF,   0,      0.43649727    ,      0.43649727    ,      0.43649727
```

Report Variable

As shown above in the report variable dictionary, there are many variables available for reporting.

```
Report Variable,
       \note each Report Variable command picks variables to be put onto the standard output file (.eso)
       \note some variables may not be reported for every simulation
  A1 , \field Key_Value
       \note use '*' (without quotes) to apply this variable to all keys
  A2 , \field Variable_Name
  A3 , \field Reporting_Frequency
       \type choice
       \key detailed
       \key timestep
       \key hourly
       \key daily
       \key monthly
       \key runperiod
  A4 ; \field Schedule_Name
```

Each Report Variable object causes a specific number assignment for outputs. For example, you could request separate reporting for the outside temperature:

```
report variable,*,outdoor dry bulb,timestep;
report variable,*,outdoor dry bulb,hourly;
report variable,*,outdoor dry bulb,monthly;
```

And the following would appear in the standard output file:

```
6,2,Environment,Outdoor Dry Bulb [C] !TimeStep
7,2,Environment,Outdoor Dry Bulb [C] !Hourly
8,2,Environment,Outdoor Dry Bulb [C] !Monthly [Value,Min,Day,Hour,Minute,Max,Day,Hour,Minute]
```

Item # 6 will be listed following the TimeStep timestamp for each timestep. Item #7 will be listed following an hourly timestamp. And item #8 will be listed following a monthly timestamp and has additional fields (because it is an "average" variable) that show the minimum and maximum values with identifying times for those minimum and maximum. An excerpt will illustrate:

```
     2,  1, 7,21, 0, 1, 0.00,15.00,Monday – timestep timestamp
6,17.08889
48,21.39851
49,0.0000000E+00
53,0.0000000E+00
60,21.87214
     2,  1, 7,21, 0, 1, 0.00,60.00,Monday – hourly timestamp
7,16.75555
     4,  1, 7 – monthly timestamp
8,22.77037,15.00000,21, 4,60,32.77778,21,14,60
```

To interpret, the first value (#6) is 17.09°C, #7 is 16.76°C (average for the hour), and #8 is 22.77°C, the average for the month with the low (minimum) of 15°C occurring on 7/21 4:60 (or 5:00) and the high (maximum) occurring on 7/21 14:60 (or 15:00).

Field: Key_Value

This alpha field can be used to make a specific reference for reporting. In addition to the generic variable names listed in the Report Variable Dictionary for the input file, variables will also have a key designator (such as Zone name or Surface name). You can reference the standard output file (**eplusout.eso**) to see just how these look.

```
41,2,ZN001:WALL004,Surface Inside Temperature[C]
42,2,ZN001:WALL004,Surface Outside Temperature[C]
43,2,ZN001:WALL004,Surface Int Convection Coeff[W/m2-K]
44,2,ZN001:WALL004,Surface Ext Convection Coeff[W/m2-K]
46,2,ZONE ONE,Mean Radiant Temperature[C]
47,2,ZONE ONE,Zone-Total Latent Gain[J]
51,2,ZONE ONE,Zone-Total Electric Consumption[J]
58,2,ZONE ONE,Zone/Sys Air Temp[C]
```

For example, in the previous block, the key for the surface variables is **ZN001:WALL004** whereas the key for the zone variables is **ZONE ONE** (note that the space is required and significant for this key).

You can have all keys listed in the standard output file by putting a "*" in this field or you can have specific items listed by putting in a key value.

Field: Variable_Name

This alpha field is the variable name (you don't have to put on the units) that is shown in the Report Variable Dictionary file.

Field: Reporting_Frequency

This field specifies how often the variable will be listed in the output file. "**Detailed**" will list the value each calculation step (i.e. Zone or HVAC). "**TimeStep**" will be the same as "detailed" for Zone valued variables and will be aggregated to the Zone timestep (i.e. TimeStep in Hour value) for HVAC variables. "**Hourly**" will aggregate the value to the hour. "**Daily**" will aggregate to the day (i.e. one value per day). "**Monthly**" will aggregate to the month (i.e. one value per month). "**RunPeriod**" will aggregate to the runperiod specified (each Design Day is a run period as is each runperiod object).

Field: Schedule_Name

The final field is a schedule name. This can be used to limit the number of lines that appear in your output file. For example, a schedule such as "ON PEAK" or "OFF PEAK" could provide a slice of values. Or, a seasonal schedule could be devised.

Other IDF examples:

```
Report Variable, * , Mean Air Temperature, hourly;
Report Variable, * , Mean Radiant Temperature, timestep;
Report Variable, * , Zone/Sys Sensible Heating Energy, hourly;
Report Variable, * , Zone/Sys Sensible Cooling Energy, hourly;
Report Variable, * , Zone/Sys Air Temp, hourly;
```

Report Meter

Appropriate variables are grouped onto "meters" for reporting purposes. These values are put onto the eplusout.mtr file. This file has the same structure as the eplusout.eso file.

Field: Meter_Name

Meter names applicable for the simulation are shown on the Report Variable Dictionary file described earlier. A snipped from that file will illustrate:

```
Zone,Meter,Electricity:Facility [J]
Zone,Meter,Electricity:Building [J]
Zone,Meter,Electricity:Zone:RESISTIVE ZONE [J]
Zone,Meter,Electricity:Zone:EAST ZONE [J]
Zone,Meter,Electricity:Zone:NORTH ZONE [J]
Zone,Meter,GeneralLights:Electricity [J]
Zone,Meter,GeneralLights:Electricity:Zone:RESISTIVE ZONE [J]
Zone,Meter,GeneralLights:Electricity:Zone:EAST ZONE [J]
Zone,Meter,GeneralLights:Electricity:Zone:NORTH ZONE [J]
```

Meter names are of two forms: <FuelType>:<name> or <EndUseType>:<FuelType>:<name>. The user requests reporting by either specifying the full name above (without Units) or a "wildcard" represntation of that name (to obtain all meters of a type). For example, entering "Electricity:*" for the meter name will report on all the Electricity: meters (Electricity:Facility, Electricity:Building, Electricity:Zone:Resistive Zone, Electricity:Zone:East Zone, Electricity:North Zone in the example above). Both the fuel types and enduse types are set within the program by the developers. Current Fuel types are shown in the table below:

Table 6. Table of Metered Fuel Types

Energy/Fuel Type
Electricity
Gas
Coal
FuelOil#1
FuelOil#2
Propane
Water

The end use types are shown in the following table:

Table 7. End Use Category Types

End Use Types
GeneralLights
TaskLights
ExteriorLights
Heating
Cooling
DHW
Cogeneration
ExteriorEquipment
ZoneSource
PurchasedHotWater
PurchasedChilledWater

Specific meter types are then used for grouping the fuel type meters:

Table 8. Overall Meter Types

Meters
Facility
Building
Zone
System
Plant

Facility meters contain all the energy of a fuel type. Building meters contain the sum of each zone's energy. System meters contain the energy from the system components. Plant meters contain the energy from the plant equipments.

Thus, the following relationships should be observed:

$$Facility = \sum \left(Building + System + Plant + Exterior \right)$$

$$Building = \sum_{1}^{NumberOfZones} Zone$$

Further descriptions of Metering is contained in the "Getting Started" document.

Field: Reporting_Frequency

Similar to the report variables, meters can be reported at different frequencies. Their resolution is the Zone Time Step interval (Number of Time steps input). For this frequency, the elemental value of the meter will be reported. For more inclusive frequencies, the summed value along with the maximum and minimum values for the time interval will be reported.

The IDD definition for the Report Meter object is:

```
Report Meter,
  A1 , \field Meter_Name
       \note Form is EnergyUseType:..., e.g. Electricity:* for all Electricity meters
       \note or EndUse:..., e.g. GeneralLights:* for all General Lights
  A2 ; \field Reporting_Frequency
       \type choice
       \key timestep
       \key hourly
       \key daily
       \key monthly
       \key runperiod
```

An example of specifying in the IDF:

```
Report Meter,Electricity:*,Environment;
Report Meter,ExteriorEquipment*,Environment;
```

Output

EnergyPlus produces several output files as shown in the section on "Running EnergyPlus". This section will discuss the data contained in the "standard" output file (**eplusout.eso**). It, too, has a data dictionary but unlike the input files, the output data dictionary is contained within the output file. Thus, the basic structure of the standard output file is:

```
Data Dictionary Information
End of Data Dictionary
Data
…
Data
End of Data
```

As with the IDF structure, there are rules associated with the interpretation of the standard output data dictionary. These rules are summarized as follows:

- The first item on each line is an integer which represents the "report code". This "report code" will be listed in the data section where it will also be the first item on each line, identifying the data. Only 2 lines in the output file will not have an integer as the first item ("End of Data Dictionary" and "End of Data" lines).
- The second item on each line is also an integer. This integer corresponds to the number of items left on the dictionary line. Each string consists of a variable name and units in square brackets. Square brackets are required for all strings. If there are no units associated with a particular variable, then there are no characters between the brackets.

Six standard items appear at the start of every EnergyPlus Standard Output File Data Dictionary:

```
Program Version,EnergyPlus, 1.0, Beta 2, Build 017
1,5,Environment Title[],Latitude[degrees],Longitude[degrees],Time Zone[],Elevation[m]
2,6,Day of Simulation[],Month[],Day of Month[],DST Indicator[1=yes 0=no], Hour[], StartMinute[], EndMinute[], DayType
3,3,Cumulative Day of Simulation[],Month[],Day of Month[],DST Indicator[1=yes 0=no],DayType
4,2,Cumulative Days of Simulation[],Month[]
5,1,Cumulative Days of Simulation[]
```

Item 0 is the program version statement.

Item 1 is produced at the beginning of each new "environment" (design day, run period).

Item 2 is produced prior to any variable reported at the timestep or hourly intervals. Hourly intervals will be shown with a start minute of 0.0 and an end minute of 60.0. Timestep intervals will show the appropriate start and end minutes.

Item 3 is produced prior to any variable reported at the daily interval.

Item 4 is produced prior to any variable reported at the monthly interval.

Item 5 is produced prior to any variable reported at the end of the "environment".

Following these five standard lines will be the variables requested for reporting from the input file (ref. Report Variable). For example:

```
6,2,Environment,Outdoor Dry Bulb [C] !Hourly
21,2,ZONE ONE,Mean Air Temperature[C] !Hourly
22,2,ZONE ONE,Zone-Total Latent Gain[J] !Hourly
26,2,ZONE ONE,Zone-Total Electric Consumption[J] !Hourly
```

This example illustrates the non-consecutive nature of the "report codes". Internally, EnergyPlus counts each variable that *could* be reported. This is the assigned "report code". However, the user may not request each possible variable for reporting. Note that, currently, the requested reporting frequency is shown as a comment (!) line in the standard output file.

The data is produced when the actual simulation is performed (after the warmup days). Data output is simpler in format than the data dictionary lines. From the dictionary above:

```
     1,DENVER COLORADO WINTER,  39.75,-104.87,  -7.00,1610.26
     2,  1, 1,21, 0, 1, 0.00,60.00,Monday
6,-17.22222
21,-17.22219
22,0.0000000E+00
26,0.0000000E+00
     2,  1, 1,21, 0, 2, 0.00,60.00,Monday
6,-17.22222
21,-17.22219
22,0.0000000E+00
26,0.0000000E+00
     2,  1, 1,21, 0, 3, 0.00,60.00,Monday
6,-17.22222
21,-17.22219
22,0.0000000E+00
26,0.0000000E+00
…
```

This output file can be easily turned into a form that is read into commonly used spreadsheet programs where it can be further analyzed, graphed, etc.

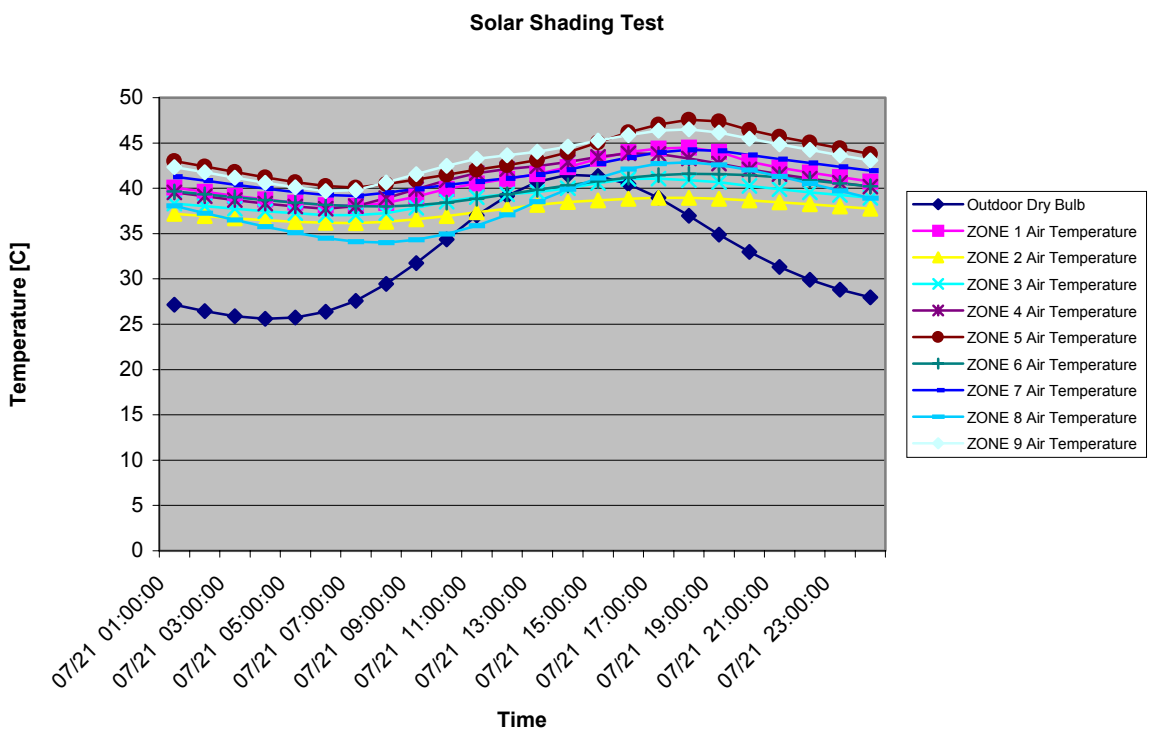

Figure 41. Example Chart from Standard Output File

Weather Data

Weather data in EnergyPlus is a simple text-based format, similar to the input data and output data files. The weather data format includes basic location information in the first eight lines: location (name, state/province/region, country), data source, latitude, longitude, time zone, elevation, peak heating and cooling design conditions, holidays, daylight saving period, typical and extreme periods, two lines for comments, and period covered by the data. The data are also comma-separated and contain much of the same data in the TMY2 weather data set (NREL 1995). EnergyPlus does not require a full year or 8760 (or 8784) hours in its weather files. In fact, EnergyPlus allows and reads subsets of years and even sub-hourly (5 minute, 15 minute) data—the weather format includes a 'minutes' field. EnergyPlus comes with a utility that reads standard weather service file types such as TD1440 and DATSAV2 and newer 'typical year' weather files such as TMY2 and WYEC2.

The "data dictionary" for EnergyPlus Weather Data is shown below. Note that semi-colons do NOT terminate lines in the EnergyPlus Weather Data.

Note that in the header records where "date" is used, the interpretation is similar to the earlier description (see Table 1. Date Field Interpretation). For clarity, the interpretations are listed here along with Weather file header applicability.

Table 9. Weather File Date Field Interpretation

Field Contents	Interpretation	Header Applicability
<number>	Julian Day of Year	All date fields
<number> / <number>	Month / Day	All date fields
<number> Month	Day and Month	All date fields
Month <number>	Day and Month	All date fields
<number> Weekday in Month	Numbered weekday of month	Holiday, DaylightSavingPeriod
Last Weekday In Month	Last weekday of month	Holiday, DaylightSavingPeriod

In the table, Month can be one of (January, February, March, April, May, June, July, August, September, October, November, December). Abbreviations of the first three characters are also valid.

In the table, Weekday can be one of (Sunday, Monday, Tuesday, Wednesday, Thursday, Friday, Saturday). Abbreviations of the first three characters are also valid.

```
!ESP-r/EnergyPlus Weather Format
!April 2001
\memo  Dates in the EPW file can be several formats:
\memo  <number>/<number>  (month/day)
\memo  <number> Month
\memo  Month <number>
\memo <number>  (taken to be Julian day of year)
\memo Months are January, February, March, April, May, June, July, August,
\memo            September, October, November, December
\memo Months can be the first 3 letters of the month
```

```
LOCATION,
   A1, \field city
   \type alpha
   A2, \field State Province Region
   \type alpha
   A3, \field Country
   \type alpha
   A4, \field Source
   \type alpha
   N1, \field WMO
    \type integer
    \note usually a 6 digit field.  Used as alpha in EnergyPlus
   N2 , \field Latitude
       \units deg
       \minimum -90.0
       \maximum +90.0
       \default 0.0
       \note + is North, - is South,
       \note degree minutes represented in decimal (i.e. 30 minutes is .5)
       \type real
   N3 , \field Longitude
       \units deg
       \minimum -180.0
       \maximum +180.0
       \default 0.0
       \note - is West, + is East,
       \note degree minutes represented in decimal (i.e. 30 minutes is .5)
       \type real
   N4 , \field TimeZone
       \units hr - not on standard units list
       \minimum -12.0
       \maximum +12.0
       \default 0.0
       \note  Time relative to GMT.
       \type real
   N5  \field Elevation
       \units m
       \minimum -1000.0
       \maximum< +9999.9
       \default 0.0
       \type real
```

```
DESIGN CONDITIONS,
-- this will be very similar to the ASHRAE format but has not been completed decided yet
```

```
TYPICAL/EXTREME PERIODS,
     N1, \field Number of Typical/Extreme Periods
     A1, \field Typical/Extreme Period 1
     N2, \field Period 1 Start Date
     N3, \field Period 1 End Date
     A2, \field Typical/Extreme Period 2
     N4, \field Period 2 Start Date
     N5, \field Period 2 End Date
     A3, \field Typical/Extreme Period 3
     N6, \field Period 3 Start Date
     N7, \field Period 3 End Date
     A4, \field Typical/Extreme Period 4
     N8, \field Period 4 Start Date
     N9, \field Period 4 End Date
 -- etc to # of periods entered
```

```
GROUND TEMPERATURES,
     N1, Number of Ground Temperature Depths
     N2, \field Ground Temperature Depth 1
         \units m
       N3, \field Depth 1 Soil Conductivity
         \units W/m-K,
       N4, \field Depth 1 Soil Density
         \units kg/m3
       N5, \field Depth 1 Soil Specific Heat
         \units J/kg-K,
       N6, \field Depth 1 January Average Ground Temperature
        \units C
       N7, \field Depth 1 February Average Ground Temperature
        \units C
       N8, \field Depth 1 March Average Ground Temperature
        \units C
       N9, \field Depth 1 April Average Ground Temperature
        \units C
       N10, \field Depth 1 May Average Ground Temperature
        \units C
       N11, \field Depth 1 June Average Ground Temperature
        \units C
       N12, \field Depth 1 July Average Ground Temperature
        \units C
       N13, \field Depth 1 August Average Ground Temperature
        \units C
       N14, \field Depth 1 September Average Ground Temperature
        \units C
       N15, \field Depth 1 October Average Ground Temperature
        \units C
       N16, \field Depth 1 November Average Ground Temperature
        \units C
       N17, \field Depth 1 December Average Ground Temperature
        \units C
-- etc to # of depths entered
```

```
HOLIDAYS/DAYLIGHT SAVING,
     A1, \field LeapYear Observed
      \type choice
      \key Yes
      \key No
      \note Yes if Leap Year will be observed for this file
      \note No if Leap Year days (29 Feb) should be ignored in this file
     N2, \field Daylight Saving Start Date
     N3, \field Daylight Saving End Date
     A2, \field Holiday 1 Name
     N4, \field Holiday 1 Date
     A3, \field Holiday 2 Name
     N5, \field Holiday 2 Date
     A4, \field Holiday 3 Name
     N6, \field Holiday 3 Date
-- etc to # of Holidays entered
```

```
COMMENTS 1, A1 \field Comments_1
COMMENTS 2, A1 \field Comments_2
```

```
DATA PERIODS,
     N1, \field Number of Data Periods
     N2, \field Number of Records per hour
     A1, \field Data Period 1 Name/Description
     A2, \field Data Period 1 Start Day of Week
       \type choice
       \key  Sunday
       \key  Monday
       \key  Tuesday
       \key  Wednesday
       \key  Thursday
       \key  Friday
       \key  Saturday
     N3, \field Data Period 1 Start Date
     N4, \field Data Period 1 End Date
-- etc to # of periods entered
```

The following data contains “missing” descriptors, a new concept not introduced previously in our IDD conventions. In this case, it will be processed as though those values are “missing” in the weather conversions and/or EnergyPlus weather processing. This may not always be desirable though EnergyPlus will fill in “missing” value with something “appropriate”. Eventually, these missing values will be available through the IDD and users will be able to supply their own values or EnergyPlus will calculate those values (such as radiation and illuminance) that are not a simple value replacement. Until then, the following are used:

Table 10. Missing weather replacement values

Data item	Supplied Value	Units
Dry Bulb Temperature	6	C
Dew Point Temperature	3	C
Relative Humidity	50	%
Atmospheric Pressure	101325	Pa
Wind Speed	2.5	m/s
Wind Direction	180	Deg
Total Sky Cover	5	(tenths)
Opaque Sky Cover	5	(tenths)
Visibility	777.7	Km
Ceiling Height	77777	m
Precipitable Water	0	Mm
Aerosol Optical Depth	0	Broadband turbidity
Snow Depth	0	Cm
Days Since Last Snow	88	Days
Radiation Values (Direct/Diffuse)	0.0	Wh/m2
Illuminance Values	0.0	lux (or CD/m2)

```
! Actual data does not have a descriptor
     N1, \field Year
     N2, \field Month
     N3, \field Day
     N4, \field Hour
     N5, \field Minute
     A1, \field Data Source and Uncertainty Flags
     N6, \field Dry Bulb Temperature
        \units C
     N7, \field Dew Point Temperature
        \units C
     N8, \field Relative Humidity
         \missing 999.
     N9, \field Atmospheric Station Pressure
        \units Pa
        \missing 999999.
     N10, \field Extraterrestrial Horizontal Radiation
        \units Wh/m2
        \missing 9999.
     N11, \field Extraterrestrial Direct Normal Radiation
        \units Wh/m2
        \missing 9999.
     N12, \field Horizontal Infrared Radiation Intensity
        \units Wh/m2
        \missing 9999.
     N13, \field Global Horizontal Radiation
        \units Wh/m2
        \missing 9999.
     N14, \field Direct Normal Radiation
        \units Wh/m2
        \missing 9999.
     N15, \field Diffuse Horizontal Radiation
        \units Wh/m2
        \missing 9999.
     N16, \field Global Horizontal Illuminance
        \units lux
        \missing 999999.
     N17, \field Direct Normal Illuminance
        \units lux
        \missing 999999.
     N18, \field Diffuse Horizontal Illuminance
        \units lux
        \missing 999999.
     N19, \field Zenith Luminance
        \units Cd/m2
        \missing 9999.
     N20, \field Wind Direction
        \units degrees
        \missing 999.
     N21, \field Wind Speed
        \units m/s
        \missing 999.
     N22, \field Total Sky Cover
        \missing 99
     N23, \field Opaque Sky Cover
        \missing 99
     N24, \field Visibility
        \units km
        \missing 9999
     N25, \field Ceiling Height
        \units m
        \missing 99999
     N26, \field Present Weather Observation
     N27, \field Present Weather Codes
     N28, \field Precipitable Water
        \units mm
     N29, \field Aerosol Optical Depth
        \units thousandths
     N30, \field Snow Depth
        \units cm
        \missing 999
```

```
N31; \field Days Since Last Snowfall
   \missing 99
```

Running EnergyPlus

EnergyPlus is written in language conforming to Fortran Standard 90/95. It runs as a 32 bit console (non-Windows) application on Intel compatible computers (Windows NT, Windows 95/98). More explicit details on running EnergyPlus are available in a separate document (Running EnergyPlus in Getting Started). The following files are used to run EnergyPlus:

```
EnergyPlus.exe (the executable file)
Energy+.ini (described below)
Energy+.idd (the input data dictionary file)
In.idf (the input file)
In.epw – optional (weather data file)
```

The input data dictionary and input data file have been discussed in the previous sections of this document.

For weather simulations, EnergyPlus accepts EnergyPlus weather files. Previous versions accepted BLAST formatted weather files and now a BLASTWeatherConverter program is available but not provided with the installation. The actual file name is **in.epw**.

The Energy+.ini file is a "standard" Windows™ ini file and can be manipulated using the Windows API calls though EnergyPlus uses standard Fortran to manipulate it. It is a very simple ini file and an example is shown below:

```
[program]
dir=D:\energyplus\
```

The [program] section with the "dir" keyword gives EnergyPlus the directory where to find the Energy+.idd file. This path is used in the "Open" statement. If you leave it blank, EnergyPlus will expect to find it in the directory where the program is running. Energy+.ini and in.idf file should be in the directory from which you are running EnergyPlus.exe.

For the advanced user, there is also the "EPMacro" program, described in "Appendix C. Input Macros". You run it as a separate program before EnergyPlus (the batch file included in the install and shown in the GettingStarted document contains the commands).

EnergyPlus creates the following files:

Table 11. EnergyPlus Output Files

FileName	Description
Audit.out	Echo of input
Eplusout.err	Error file
Eplusout.eso	Standard Output File
Eplusout.eio	One time output file
Eplusout.rdd	Report Variable Data Dictionary
Eplusout.dxf	DXF (from Report,Surfaces,DXF;)
Eplusout.end	A one line summary of success or failure

The eplusout.err file may contain three levels of errors (Warning, Severe, Fatal) as well as the possibility of just message lines. These errors may be duplicated in other files (such as the standard output file).

Table 12. EnergyPlus Errors

Error Level	Action
Warning	Take note
Severe	Should Fix
Fatal	Program will abort

EnergyPlus produces several messages as it is executing, as a guide to its progress. For example, the run of the 1ZoneUncontrolled input file from Appendix B produces:

```
EnergyPlus Starting
 Warming up
 Initializing Response Factors
 Initializing Window Coefs
 Initializing Solar Calculations
 Warming up
 Warming up
 Performing Simulation
 Warming up
 Initializing Solar Calculations
 Warming up
 Warming up
 Performing Simulation
EnergyPlus Completed Successfully
```

Extensive timing studies and fine-tuning of EnergyPlus is NOT complete. To give you an idea of comparable run times, we present the following (does not include HVAC) with an early version of EnergyPlus running on a 450MHZ machine. Remember, BLAST would be 1 calculation per hour, EnergyPlus (in this case) was 4 calculations per hour.

File	BLAST Per Zone	EnergyPlus Per Zone
GeometryTest (5 Zones, 2 Design Day, Full Weather Year)	13 sec	33 sec
SolarShadingTest (9 Zones, Full Weather Year)	7 sec	25 sec

Table 13. Timings Comparison (EnergyPlus vs. BLAST)

Appendix A. Units and Abbreviations

Standard EnergyPlus Units

EnergyPlus expects information in a single unit system (SI). This requires interface developers to convert user inputs from those preferred by architects and engineers into the standard metric units of EnergyPlus. EnergyPlus will not perform any units conversions and will not have any unit conversion routines.

ASCII with no spaces is used for abbreviations. Note that exponents appear without any indication of exponentiation: i.e., kg/m3 not kg/m^3 or kg/m**3. Also note the use of dashes. We have W/m2-K not W/m2*K or W/(m2*K).

At the end we note the "problem" variables – the inputs that have non-standard units. Inputs using these units will have to be changed and the code checked to see how the quantities are used internally.

Table 14. Standard EnergyPlus Units

Quantity	unit	abbreviation
angular degrees	degree	deg
Length	meter	m
Area	square meter	m2
Volume	cubic meter	m3
Time	seconds	s
Frequency	Hertz	Hz
Temperature	Celsius	C
absolute temperature	Kelvin	K
temperature difference	Kelvin	delK
speed	meters per second	m/s
energy (or work)	Joules	J
power	Watts	W
mass	kilograms	kg
force	Newton	N
mass flow	kilograms per second	kg/s
volume flow	cubic meters per second	m3/s
pressure	Pascals	Pa
pressure difference	Pascals	delPa
specific enthalpy	Joules per kilogram	J/kg
density	kilograms per cubic meter	kg/m3
heat flux	watts per square meter	W/m2
specific heat	-------	J/kg-K
conductivity	-------	W/m-K
diffusivity	-------	m2/s
heat transfer coefficient	-------	W/m2-K
R-value	-------	m2-K/W

heating or cooling capacity	Watts	W
electric potential	volts	V
electric current	Amperes	A
illuminace	lux	lx
luminous flux	lumen	lm
luminous intensity	candelas	cd
luminance	candelas per square meter	cd/m2
vapor diffusivity	m2/s	
viscosity (absolute)	-------	kg/m-s
viscosity temperature derivative	-------	kg/m-s-K
density temperature derivative	-------	kg/m3-K
Prandtl number temperature derivative	-------	1/K
porosity	-------	m3/m3
thermal gradient coeff for moisture capacity	-------	kg/kg-K
conductivity temperature derivative	-------	W/m-K2
isothermal moisture capacity	-------	m3/kg

There are some problem units that haven't been addressed yet:

conductivity temperature derivative {W/m-K2 * 10^-5}

Appendix B. Simple IDF file

This very simple input file is used to illustrate the EnergyPlus input format. Note that, though valid, this model does not contain either a floor or a roof – only exterior walls.

```
! 1ZoneUncontrolled.idf
! Basic file description: Basic test for EnergyPlus
! Run:      2 design days.
! Building: Fictional 1 zone building with resistive walls.  No floor.  No Roof.
! Internal: None.
! System:   None.
! Plant:    None.
! 4/7/00 -- Updated with most "detailed" models for this input file:
! SolDis=-1, Aniso, Detailed Interior and Exterior Convection
 Lead Input;
 Location, DENVER COLORADO,     !- Location Name
   39.750,  !- Latitude
 -104.870,  !- Longitude
     -7.0,  !- Time Zone
  1610.26;  !- Elevation {m}
 DesignDay,DENVER COLORADO WINTER,     !- Design Day Name
  -17.22222    ,     !- Max Dry-Bulb {C}
  0.0000000E+00,     !- Daily Temp Range {C}
  -17.22222    ,     !- Wet-Bulb at Max {C}
   83361.40    ,     !- Barometric Pressure {N/M**2}
   4.115816    ,     !- Wind Speed {M/Sec}
   169.0000    ,     !- Wind Direction {Degrees N=0, S=180}
  0.0000000E+00,     !- Clearness {0.0 to 1.1}
           0,     !- Rain {0-no,1-yes}
           0,     !- Snow on ground {0-no,1-yes}
          21,     !- Day of Month
           1,     !- Month
      Monday,      !- Day Type
           0;   !- Daylight Saving Time Indicator
 DesignDay,DENVER COLORADO SUMMER,     !- Design Day Name
   32.77778    ,     !- Max Dry-Bulb {C}
   17.77778    ,     !- Daily Temp Range {C}
   15.00000    ,     !- Wet-Bulb at Max {C}
   84058.15    ,     !- Barometric Pressure {N/M**2}
   3.971544    ,     !- Wind Speed {M/Sec}
   146.0000    ,     !- Wind Direction {Degrees N=0, S=180}
   1.100000    ,     !- Clearness {0.0 to 1.1}
           0,     !- Rain {0-no,1-yes}
           0,     !- Snow on ground {0-no,1-yes}
          21,     !- Day of Month
           7,     !- Month
      Monday,      !- Day Type
           0;   !- Daylight Saving Time Indicator
MATERIAL:Regular-R,R13LAYER,  !- Material Name
 Rough,  !- Roughness
   2.290965    ,  !- Resistance {m2-K/w}
  0.9000000    ,   !- Thermal Emittance
  0.7500000    ,   !- Solar Absorptance
  0.7500000    ;   !- Visible Absorptance
  CONSTRUCTION, R13WALL,  ! Material layer names follow:
      R13LAYER;
 GroundTemperatures,  1.22222233E+01,  1.27777786E+01,  1.44444447E+01,  1.66666679E+01,  1.94444447E+01,
2.33333340E+01,  2.22222233E+01,  2.00000000E+01,  1.77777786E+01,  1.66666679E+01,  1.44444447E+01,
1.27777786E+01;
 End Lead Input;
```

```
 Simulation Data;
 TIMESTEP IN HOUR,     4;
 BUILDING,NONE,  ! Building Name
  0.0000000E+00,   ! Building Azimuth
           2,   ! Building Terrain
  3.9999999E-02,   ! Loads Convergence Tolerance
  4.0000002E-03,   ! Temperature Convergence Tolerance
          -1;   ! Solar Distribution
          ! -1 is appropriate Solar Distributione -- this has no floor
 SKY RADIANCE DISTRIBUTION,1;
 SOLUTION ALGORITHM,0;   ! Solution Algorithm
 INSIDE CONVECTION ALGORITHM,1;   ! Inside Convection Algorithm
 OUTSIDE CONVECTION ALGORITHM,1;   ! Outside Convection Algorithm
 ZONE, ZONE ONE,   ! Zone Name
  0.0000000E+00,   ! Zone North Axis (relative to Building)
  0.0000000E+00,   ! Zone X Origin {m}
  0.0000000E+00,   ! Zone Y Origin {m}
  0.0000000E+00,   ! Zone Z Origin {m}
           1,   ! Zone Type
           1,   ! Zone Multiplier
  -100.0000    ,   ! Zone Ceiling Height {m}
  0.0000000E+00;   ! Zone Volume {m**3}
 ScheduleType,Fraction, 0.0 : 1.0 ,CONTINUOUS;
 DAYSCHEDULE,TransDayOn,Fraction,1,1,1,1,1,1,1,1,1,1,1,1,1,1,1,1,1,1,1,1,1,1,1,1;
 DAYSCHEDULE,TransDayOff,Fraction,0,0,0,0,0,0,0,0,0,0,0,0,0,0,0,0,0,0,0,0,0,0,0,0;

WEEKSCHEDULE,TransWeekOn,TransDayOn,TransDayOn,TransDayOn,TransDayOn,TransDayOn,TransDayOn,TransDayOn,Tran
sDayOn,TransDayOn,TransDayOn,TransDayOn,TransDayOn;

WEEKSCHEDULE,TransWeekOff,TransDayOff,TransDayOff,TransDayOff,TransDayOff,TransDayOff,TransDayOff,TransDay
Off,TransDayOff,TransDayOff,TransDayOff,TransDayOff,TransDayOff;
 SCHEDULE,TransOn,Fraction,TransWeekOn,1,1,12,31;
! BLAST Translator units, UpperLeftCorner, Counter Clock-Wise, World Coordinate System
 ! Note original Building and Zone Origins are retained
 SurfaceGeometry,UpperLeftCorner,CounterClockWise,WorldCoordinateSystem;
 Surface:HeatTransfer,Zn001:Wall001,  !- Base Surface Name
  Wall,R13WALL,  !- Class and Construction Name
  ZONE ONE,  !- Zone
  ExteriorEnvironment,,  !- Exterior Conditions and Target (if applicable)
   SunExposed,  !- Solar Exposure
   WindExposed,  !- Wind Exposure
  0.5000000    ,  !- VF to Ground
           4, !-Rectangle
  0.0000000E+00,  0.0000000E+00,   4.572000    ,
  0.0000000E+00,  0.0000000E+00,  0.0000000E+00,
   15.24000    ,  0.0000000E+00,  0.0000000E+00,
   15.24000    ,  0.0000000E+00,   4.572000    ;
 Surface:HeatTransfer,Zn001:Wall002,  !- Base Surface Name
  Wall,R13WALL,  !- Class and Construction Name
  ZONE ONE,  !- Zone
  ExteriorEnvironment,,  !- Exterior Conditions and Target (if applicable)
   SunExposed,  !- Solar Exposure
   WindExposed,  !- Wind Exposure
  0.5000000    ,  !- VF to Ground
           4, !-Rectangle
   15.24000    ,  0.0000000E+00,   4.572000    ,
   15.24000    ,  0.0000000E+00,  0.0000000E+00,
   15.24000    ,   15.24000    ,  0.0000000E+00,
   15.24000    ,   15.24000    ,   4.572000    ;
 Surface:HeatTransfer,Zn001:Wall003,  !- Base Surface Name
  Wall,R13WALL,  !- Class and Construction Name
  ZONE ONE,  !- Zone
  ExteriorEnvironment,,  !- Exterior Conditions and Target (if applicable)
   SunExposed,  !- Solar Exposure
   WindExposed,  !- Wind Exposure
  0.5000000    ,  !- VF to Ground
           4, !-Rectangle
   15.24000    ,   15.24000    ,   4.572000    ,
   15.24000    ,   15.24000    ,  0.0000000E+00,
  0.0000000E+00,   15.24000    ,  0.0000000E+00,
  0.0000000E+00,   15.24000    ,   4.572000    ;
```

```
 Surface:HeatTransfer,Zn001:Wall004,  !- Base Surface Name
  Wall,R13WALL,  !- Class and Construction Name
  ZONE ONE,  !- Zone
  ExteriorEnvironment,,  !- Exterior Conditions and Target (if applicable)
   SunExposed,  !- Solar Exposure
   WindExposed,  !- Wind Exposure
  0.5000000    ,  !- VF to Ground
           4, !-Rectangle
  0.0000000E+00,   15.24000    ,   4.572000    ,
  0.0000000E+00,   15.24000    ,  0.0000000E+00,
  0.0000000E+00,  0.0000000E+00,  0.0000000E+00,
  0.0000000E+00,  0.0000000E+00,   4.572000    ;
report variable,*,outdoor dry bulb,hourly;
report variable,*,mean air temperature,hourly;
report variable,*,Zone-Total Latent Gain,hourly;
report variable,*,Zone-Total Electric Consumption,hourly;
report variable,*,mean radiant temperature,hourly;
Report variable,*,Surface Inside Temperature,daily;
Report variable,*,Surface Outside Temperature,daily;
Report variable,*,Surface Int Convection Coeff,daily;
Report variable,*,Surface Ext Convection Coeff,daily;

report variable dictionary;
report,surfaces,dxf;
report,construction;
 End Simulation Data;
```

Appendix C. Input Macros

Introduction

The Input Macros feature increases the flexibility of the EnergyPlus input files. This feature is intended for advanced users who are already familiar with EnergyPlus IDF files and need to prepare input manually. The basic capabilities are:

1) Incorporating external files containing pieces of IDF into the main EnergyPlus input stream.

Selectively accepting or skipping portions of the input.

Defining a block of input with parameters and later referencing this block.

Performing arithmetic and logical operations on the input.

Input macro debugging and listing control.

These capabilities are invoked in the EP-MACRO program by using macro commands. Macro commands are preceded by ## to distinguish them from regular EnergyPlus input commands. After execution by the EP-MACRO processor, macro commands produce regular lines of EnergyPlus input that are shown in the resultant IDF file (out.idf) and, subsequently, in the EnergyPlus echo print (audit.out). Following are descriptions of the macro commands associated with the above capabilities. A detailed example of input macros is given at the end of this section; you should review it before reading the macro command descriptions.

Incorporating External Files

##include {includefilename}

This command puts all of the lines in an external file into the EnergyPlus input stream starting right after the command line. The name of the file that is included is the concatenation of {prefixpathname}, entered using **##fileprefix** , and {includefilename}. The lines in the external file will be listed in the resultant IDF file. When all the lines in the external file have been read in, input reverts back to the original input file at the line following the **##include** command.

##fileprefix {prefixpathname}

specifies a pathname that will be prefixed to the filename given in an **##include** command. The **##fileprefix** command allows commonly-used include files to be kept in a directory other than the directory in which the current input file resides.

Example: on a PC, the combination

##fileprefix C:\EnergyPlus\Library

##include SCHEDULES.IDF

will include into the EnergyPlus input stream the file whose full name is

C:\EnergyPlus\Library\SCHEDULES.IDF

##includesilent {includefilename}

This command is identical to **##include**, except that the lines in the included file will not be listed in the EP-MACRO echo.

##nosilent

Overrides the listing suppression of **##includesilent**. Used for debugging purposes only. After **##nosilent** , all following **##includesilent** commands are treated as **##include** commands.

Example: Assume the following files contain the indicated lines:

Main input file: **input1.inp**	**External file:** **file2.inp**
line 1a	line 2a
##include file2.inp	line 2b
line 1b	line 2c
line 1c	

The end result of processing **##include** input1.inp will be:

```
line 1a     (from input1.inp)
line 2a     (from file2.inp)
line 2b     (from file2.inp)
line 2c     (from file2.inp)
line 1b     (from input1.inp)
line 1c     (from input1.inp)
```

External files can also contain **##include** commands, as shown in the following example:

Main input file: **input1.inp**	**First external file:** **file2.inp**	**Second external file:** **file3.inp**
line 1a	line 2a	line 3a
##include file2.inp	line 2b	line 3b
line 1b	**##include** file3.inp	line 3c
line 1c	line 2c	line 3d

The end result of processing **##include** input1.tmp will be:

```
line 1a     (from input1.inp)
line 2a     (from file2.inp)
line 2b     (from file2.inp)
line 3a     (from file3.inp)
line 3b     (from file3.inp)
line 3c     (from file3.inp)
line 3d     (from file3.inp)
line 2c     (from file2.inp)
line 1b     (from input1.inp)
line 1c     (from input1.inp)
```

Note: Up to nine **##include** commands can be nested. However, there should be no recursion. This is an example of a recursion:

file1.inp contains **##include** file2.inp

file2.inp contains **##include** file1.inp

Selectively Accepting or Skipping Lines of Input

The **##if** series of commands is used to selectively accept or skip lines of input according to the following sequence:

```
##if  {condition1}
  line1a
  line1b
….

##elseif  {condition2}
  line2a
  line2b
…
```

```
##elseif  {condition3}
  line3a
  line3b
….

##else
  line N a
  line N b
….

##endif
```

Then the lines that will be included into the EnergyPlus input stream are:

```
If {condition 1} is TRUE,
  line1a
  line1b
….
otherwise

If {condition 2} is TRUE,
  line2a
  line2b
….
otherwise

If {condition 3} is TRUE,
  line3a
  line3b
….

otherwise

If {condition 1}, {condition 2}, {condition 3} are all FALSE.
  line N a
  line N b
….
```

There are six different **##if...** commands:

Command			Result
##ifdef	{macro name}	:	if macro name defined, include following lines
##ifndef	{macro name}	:	if macro name NOT defined, include following lines
##if	{condition}	:	if condition is TRUE, include following lines
##elseif	{condition}	:	if condition is TRUE, and previous conditions are FALSE, include following lines
##else		:	if all previous conditions are FALSE, include following lines
##endif		:	indicates the end of the if block

Notes:

{macro name} is explained in (3), below.

{condition} is 0 or BLANK meaning FALSE, and any other character meaning TRUE.

##ifdef and **##ifndef** do not have corresponding **##elseif** commands, but they do have corresponding **##else** and **##endif** commands.

Defining Blocks of Input

The **##def** command allows a block of input text to be defined and given a name. The block of text can then be inserted anywhere in the EnergyPlus input stream by simply referencing the name of the block. (This process is called macro expansion.) The block can have parameters (also called arguments) that can be given different values each time the block is referenced.

The syntax of the **##def** command is as follows:

```
        unique name
           |         zero or more arguments    __ macro text
           |            |                      |
           |            |                      |
           ↓            ↓                      ↓
    ##def  macro-name [ arg1 arg2,arg3 ...]   text line 1
  ↑      ↑           ↑ ↑    ↑    ↑    ↑     ↑
  |_     |           | |    |_   |   _|     |
    |    |           | |      |  |  |       |__ one
    |    |           | |      |  |  |           or
zero    one       zero_|     space(s)           more
or      or        or         or comma           spaces
more    more      more
spaces  spaces    spaces
```

Example: Define a schedule macro with name "All_Const":

```
##def All_Const[x]
        Fraction, WeekON, 1,1, 12,31;
    WEEKSCHEDULE, WeekON,
        DayON,DayON,DayON,
        DayON,DayON,DayON,
        DayON,DayON,DayON,
        DayON,DayON,DayON;
    DAYSCHEDULE, DayON, Fraction,
        x,x,x,x,x,x,x,x,x,x,x,x,
        x,x,x,x,x,x,x,x,x,x,x,x ;
##enddef
```

Then, in the EnergyPlus input stream (file in.imf), when we write :

```
SCHEDULE, Constant At 0.8, All_Const[0.8]
```

the result (file out.idf) is equivalent to:

```
SCHEDULE, Constant At 0.8,
        Fraction, WeekON, 1,1, 12,31;
    WEEKSCHEDULE, WeekON,
        DayON,DayON,DayON,
        DayON,DayON,DayON,
        DayON,DayON,DayON,
        DayON,DayON,DayON;
    DAYSCHEDULE, DayON, Fraction,
        0.8,0.8,0.8,0.8,0.8,0.8,0.8,0.8,0.8,0.8,0.8,0.8,
        0.8,0.8,0.8,0.8,0.8,0.8,0.8,0.8,0.8,0.8,0.8,0.8 ;
```

Macro definitions may have one or more arguments; the maximum number of arguments is 32. When a macro with arguments is referenced, its arguments must be given values. When a macro has no arguments, the brackets are still required both for macro definition and reference. Cautionary note: [ ] have been used in some versions of EnergyPlus inputs as comment/units fields. These will be expanded if left in the IDF and sent to EPMacro.

Macro names must be unique (except see **##set1** below); i.e., when a macro name is defined it cannot be defined again.

To summarize, commands you use to define macros are the following:

##def macro-name [**arg1**,..,**arg*n***] macro-text

Defines a macro with the name macro-name and arguments "arg1" through "arg*n*". "Macro-text" is one or more lines of text. If there are no arguments, the syntax is **##def** macro-name macro-text.

##enddef

Indicates the end of the macro definition initiated by **##def.**

##def1 macro-name [**arg1**,..,**arg*n***] macro-text

This is the same as **##def** but there is only one line of text so that the terminating command **##enddef** is not required.

##set1 macro-name macro-text

Like **##def1** but has no arguments and macro-text is evaluated before storing. "Macro-text is evaluated" means that if macro-text contains other macros, these macros will be expanded, and the expanded text becomes the macro-text defined by **##set1**.

Example:

```
                    ##def1   xx  123
                    ##set1   yy  xx[]

is equivalent to:   ##set1   yy  123

##set1  can also be used to redefine macro-name.

##set1   x   0
  .
  .
  .
##set1   x    #eval[ x[]+1 ]

(see Arithmetic Operations for description of the #eval macro.)
```

Arithmetic Operations

The built-in macro called **#eval[ ]** can be used to perform arithmetic, literal, and logical operations. It can be abbreviated to **# [ ].**

#eval[X OP Y] or #[X OP Y]

gives the result X OP Y. The allowed values for X, OP, and Y, and the corresponding result, are shown in the following table.

X *	OP **	Y	Result
number	+(plus)	number	number
number	–(minus)	number	number
number	∗(times)	number	number
number	/ (divided by)	number	number
number	min	number	number
number	max	number	number
number	mod	number	number
number	∗∗	number	number
SIN	OF	number (degrees)	number
COS	OF	number (degrees)	number
TAN	OF	number (degrees)	number
SQRT	OF	number	number

ABS	OF	number	number
ASIN	OF	number	number (degrees)
ACOS	OF	number	number (degrees)
ATAN	OF	number	number
INT	OF	number	number
LOG10	OF	number	number
LOG	OF	number	number
literal1	// (concatenate)	literal2	literal "literal1literal2"
literal1	/// (concatenate)	literal2	literal "literal1 literal2"
literal	EQS (=)	literal	logical (true or false)
literal	NES (≠)	literal	logical (true or false)
logical	AND	logical	logical (true or false)
logical	OR	logical	logical (true or false)
	NOT	logical	logical (true or false)
number	EQ (=)	number	logical (true or false)
number	NE (≠)	number	logical (true or false)
number	GT (>)	number	logical (true or false)
number	GE (≥)	number	logical (true or false)
number	LT (<)	number	logical (true or false)
number	LE (≤)	number	logical (true or false)
* Upper or lower case is allowed for SIN, COS, etc. ** Upper or lower case is allowed for OF, EQS, etc.			

Example

#eval[1 + 2 **]** when expanded becomes 3.

#eval[1 + **#eval**[2 * 3] **]** when expanded becomes 7.

Example

##set1 city[] Washington

DesignDay, #[city[ ] /// SUMMER], ! Design Day Name

gives

DesignDay, "Washington SUMMER", ! Design Day Name

The following example illustrates the use of **#eval** inside **#if** commands:

##if #[city[ ] EQS Chicago **]**

##if #[#[city[ ] EQS Chicago] and **#[** occup[ ] NES low **]]**

Notes:

1. For logical values:

False = 0 or BLANK,

True = any other character

2. A literal must be enclosed inside a pair of double quotes if it contains BLANKs or reserved characters like [ ] ( ) ,

E.g., "abc *def"

Otherwise, the quotes around the literals are optional.

3. Literal concatenation operators // and /// produce quoted literals.

E.g., # [large /// office] gives "large office"

4. Literals are case sensitive. For example, "Chicago", "CHICAGO" and "chicago" are distinct.

Macro Debugging and Listing Control

##list

Turn on listing; echo of input lines on the OUTPUT file is enabled. This is the default condition.

##nolist

Turn off listing; echo of input lines on the output file is disabled.

##show

Start printing expanded line on output file. After this command, if a macro expansion was done, the expanded line is printed on the output file. In this way you can see the end result of macro expansions, which is the input as seen by the EnergyPlus Input processor.

##noshow

Stop printing expanded line on output file. This is the default condition.

##showdetail

Start printing each macro expansion. After this command, every time a macro expansion is done the result of the expansion is printed. This can produce lots of output.

##noshowdetail

Stop printing each macro expansion. This is the default condition.

##traceback

Give full traceback when printing an error message. After this command, if there is a EP-MACRO error, a full traceback of the macro expansions in progress is printed. This is the default condition.

##notraceback

Don't give full traceback when printing an error message.

##write

Start writing expanded text into file 22. This is similar to **##show** except that the expanded lines are written into file 22. Therefore, file 22 will contain only the text that will be seen by the EnergyPlus processor. This file is used only for debugging purposes. It allows you to see what the macro-processed input file looks like.

##nowrite

Stop writing expanded text into file 22. This is the default condition.

##symboltable

Prints table of current macro names. All of the macro names that are defined will be printed.

##clear

Clear all macro definitions. All the macro names defined up to this point will be deleted.

##reserve TEXT *k* NAMES *l* STACK *m*

Allocates memory.

Reserves *k* words of space in AA array for macro definition storage.

Reserves *l* positions in macro definition names table.

Reserves *m* words of stack space.

If used, the **##reserve** command must precede all other macro commands in the EP-MACRO input. This command should be used only if one or more of the following error messages is received:

"Need more memory for storing macro definitions"

Use "**##reserve** TEXT nnnnnn" command to get more memory. Current value of *nnnnnn* is: _ _ _

"Macro table capacity exceeded"

Use "**##reserve** NAMES nnnnnn" command to get more memory. Current value of *nnnnnn* is: _ _ _

"Macro stack overflow"

Use "**##reserve** STACK nnnnnn" command to get more memory. Current value of *nnnnnn* is: _ _ _

##$ <comment>

Allows you to enter comment lines inside a macro. **<comment>** is printed in the EP-MACRO echo but is not acted on by the macro processor.

Example:

This example shows the use of the **##set**, **##include**, **##eval** and **##if** commands. Let an external file called cities.idf contain the following text:

```
 ##if #[ city[ ] EQS CHICAGO ]
  Location,Chicago IL,  !- Location Name
   41.880,  !- Latitude
   -87.63,  !- Longitude
   -6.0,    !- Time Zone
   2.;      !- Elevation {m}
##elseif #[ city[ ] EQS WASHINGTON ]
  Location,Washington DC,  !- Location Name
   38.9,   !- Latitude
   -77.0,  !- Longitude
   -5.0,   !- Time Zone
   15.;    !- Elevation {m}
##else
  ERROR --- City Undefined
##endif
```

Then the EnergyPlus input

```
##set1 city[ ] CHICAGO
##include cities.idf
```

will be converted, after macro processing, to:

```
Location,Chicago IL,  !- Location Name
   41.880,  !- Latitude
   -87.63,  !- Longitude
   -6.0,    !- Time Zone
   2.;      !- Elevation {m}
```

Listing Format

The format of listing from EP-MACRO gives information about the status of the input macros, as shown in the following:

```
1. 1.1  * 123 * ......  EnergyPlus input line
-  - -  ------- ----------------------------------
↑  ↑ ↑     ↑     ↑
|  | |     |     echo of EnergyPlus input line
|  | |     |
|  | |    line number ( if the current line is being skipped
|  | |                  by " ##if... " etc, this is indicated
|  | |                  by printing "- 123 -" instead of
|  | |                  "* 123 *" in the line number field;
|  | |                  if the current line is part of a
|  | |                  macro command, it is indicated by
|  | |                  printing "# 123 #" )
|  | |
|  | macro expansion nesting level
|  |
|"##if" nesting level
|
"##include" nesting level
```

Appendix D. Acknowledgments

Copyright Notice

Copyright © 1996-2001 The Board of Trustees of the University of Illinois and The Regents of the University of California through Ernest Orlando Lawrence Berkeley National Laboratory, pending any required approval by the US Department of Energy. All rights reserved.

Portions of the EnergyPlus™ software package have been developed and copyrighted by other individuals, companies and institutions. These portions have been incorporated into the EnergyPlus software package under license.

The following have contributed to EnergyPlus v1.0:

Portions of the EnergyPlus weather processor were developed by Office of Building Technology, State and Community Programs, Energy Efficiency and Renewable Energy, US Department of Energy, www.eren.doe.gov/buildings

Portions of the input processing, output processing, weather processor, BLAST Translator were developed by US Army Corps of Engineers, Construction Engineering Research Laboratories, 2902 Newmark Drive, Champaign IL 61821. www.cecer.army.mil

Portions of the EnergyPlus utility software (e.g. EP-Launch, IDFEditor, DOE2Translator, System Templates) were developed by GARD Analytics, Inc. 1028 Busse Highway, Park Ridge, Illinois 60068-1802, USA (847) 698-5690, www.gard.com. GARD performed independent verification and validation testing of the software after developing the testing strategy and plan. GARD analytics was also responsible for Gas absorption chiller and desiccant dehumidifier models.

Portions of flow resolver, chiller models (absorption, electric, const cop, engine-driven, gas-turbine), generator models (diesel electric, gas turbine), furnace models, heat recovery loop, plant loop, plant condenser loop, air-change dependent inside film coefficients were developed by Oklahoma State University, Stillwater, OK 74078.

Portions of EMPD moisture calculation model, DX Coil model, Air-cooled condenser model, furnace models and cooling tower model were developed by University of Central Florida, Florida Solar Energy Center (FSEC), 1679 Clearlake Road, Cocoa, FL 32922

EnergyPlus includes COMIS (Conjunction Of Multizone Infiltration Specialists) developed by a multinational, multi-institutional effort under the auspices of the International Energy Agency's Buildings and Community Systems Agreement

working group focusing on multizone air flow modeling (Annex 23) and now administered by the Swiss Federal Laboratories for Materials Testing and Research (EMPA), Division 175, Überlandstrasse 129, CH-8600 Dübendorf, Switzerland.

NOTICE: The U.S. Government is granted for itself and others acting on its behalf a paid-up, nonexclusive, irrevocable, worldwide license in this data to reproduce, prepare derivative works, and perform publicly and display publicly. Beginning five (5) years after permission to assert copyright is granted, subject to two possible five year renewals, the U.S. Government is granted for itself and others acting on its behalf a paid-up, non-exclusive, irrevocable worldwide license in this data to reproduce, prepare derivative works, distribute copies to the public, perform publicly and display publicly, and to permit others to do so.

TRADEMARKS: EnergyPlus is a trademark of the US Department of Energy.

Other Acknowledgments

This work was supported by the Assistant Secretary for Energy Efficiency and Renewable Energy, Office of Building Technology, State and Community Programs, Office of Building Systems of the U.S. Department of Energy, program manager Drury B. Crawley.

Additional support was provided by the Gas Technology Institute.